ENAPART

93 S Railroad Avenue Unit C
Bergenfield NJ 07621 USA
www.enapart.com
sales@enapart.com

Friedrich-Ebert-Anlage 36, 60325
Frankfurt am Main, Germany
www.enapart.de
anfrage@enapart.de

〒584-0023　大阪府富田林市若松町
東2丁目2番16号
www.enapart.co.jp
sales@enapart.co.jp

Via del Canneto 35,
Borgosatollo, Brescia - Italia
www.enapart.it
vendite@enapart.it

4 boulevard Carnot, 95400
villiers-le-bel, Paris, France
www.enapart.fr
sales@enapart.fr

PLAZA NUESTRA SEÑORA DE LAS
NIEVES 12 ,LOCAL ,50012,ZARAGOZA
www.enapart.es
ventas@enapart.es

Barbaros Mah. Ihlamur Bul. Ağaoğlu
My Newwork No:3/15 Ataşehir / İstanbul
www.enapart.net
satis@enapart.net

65049, ОДЕСА, ВУЛИЦЯ ІВАНА
ФРАНКА, БУДИНОК 55, ПОВЕРХ 3
www.enapart.com.ua
sales@enapart.com.ua

Складова база „Онгъл“, Склад А2, п.к.
4006, гр. Пловдив, България
www.enapart.bg
sales@enapart.bg

PRIVADA 10 B SUR #3908 COL.
ANZUREZ, C.P. 72530, PUEBLA,PUE
www.enapart.com.mx
sales@enapart.com.mx

MUNICIPIUL BUCUREŞTI, SECTOR 3,
B-DUL BASARABIA, NR.250, CORP P+5
www.enapart.ro
sales@enapart.ro

3 Austin Mews, High Street, Hemel
Hempstead, HP1 3AF , United Kingdom
www.enapart.co.uk
sales@enapart.co.uk

SCAMBIATORI
HEAT EXCHANGERS

COPERCHI FLANGIATI e/o FILETTATI in carbon steel o inox in opzione ai coperchi in ghisa. Costruzione standard FLOVEX

Theraded and/or flanged covers in carbon steel or stainless steel. Optional to the cover in cast iron.

1 VIA FLANGIA

TAGLIA *size* Ø D	SCAMBIATORE TIPO *exchanger type* FASCIO *(bundle)* FISSO *fixed* C	REMOVIBILE *removable* C	CODICI PER ORDINAZIONE 8° E 9° Carattere del codice *Code for order 8° - 9° character for code* Ø T	FERRO c. steel	INOX stain. steel
30XX	155	–	DN40	1F	1L
40XX	155	–	DN40	1F	1L
50XX	168	179	DN50	1F	1L
60XX	221	237	DN80	1F	1L
80XX	238	256	DN100	1F	1L

CONNESSIONE FLANGIA PN16 UNI 2278/29
Flanged connection

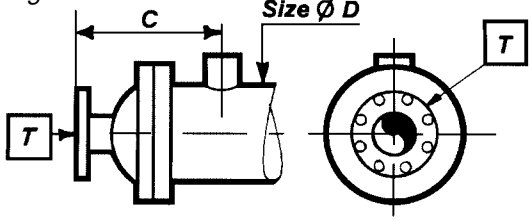

2 VIE FLANGIA

TAGLIA *size* Ø D	SCAMBIATORE TIPO *exchanger type* FASCIO *(bundle)* FISSO *fixed* C	REMOVIBILE *removable* C	CODICI PER ORDINAZIONE 8° E 9° Carattere del codice *Code for order 8° - 9° character for code* Ø T	N	FERRO c. steel	INOX stain. steel
30XX	213	–	DN25	115	2F	2L
40XX	213	–	DN25	115	2F	2L
50XX	283	294	DN40	150	2F	2L
60XX	296	312	DN50	165	2F	2L
80XX	318	336	DN65	190	2F	2L

CONNESSIONE FLANGIA PN16 UNI 2278/29
Flanged connection

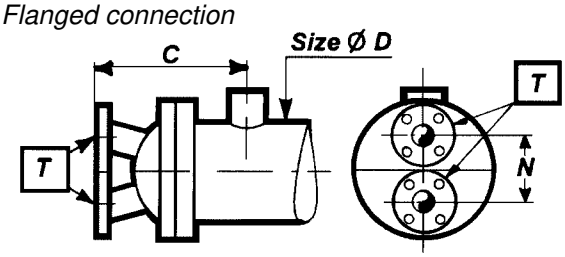

1 VIA GAS

TAGLIA *size* Ø D	SCAMBIATORE TIPO *exchanger type* FASCIO *(bundle)* FISSO *fixed* C	REMOVIBILE *removable* C	CODICI PER ORDINAZIONE 8° E 9° Carattere del codice *Code for order 8° - 9° character for code* Ø T	FERRO c. steel	INOX stain. steel
30XX	113	–	1½”	1T	1X
40XX	113	–	1½”	1T	1X
50XX	135	159	2”	1T	1X
60XX	151	167	3”	1T	1X
80XX	208	224	3”	1T	1X

CONNESSIONE FILETTATA GAS UNI 338
Threaded connection

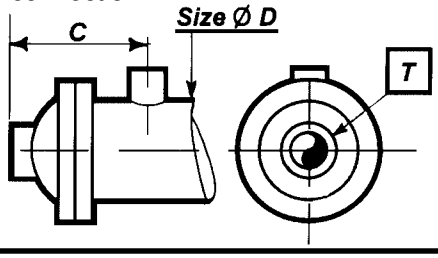

2 VIE GAS

TAGLIA *size* Ø D	SCAMBIATORE TIPO *exchanger type* FASCIO *(bundle)* FISSO *fixed* C	REMOVIBILE *removable* C	CODICI PER ORDINAZIONE 8° E 9° Carattere del codice *Code for order 8° - 9° character for code* Ø T	N	FERRO c. steel	INOX stain. steel
30XX	80	–	1”	50	2T	2X
40XX	80	–	1”	55	2T	2X
50XX	115	138	1½”	70	2T	2X
60XX	150	168	2”	80	2T	2X
80XX	198	216	2½”	115	2T	2X

CONNESSIONE FILETTATA GAS UNI 338
Threaded connection

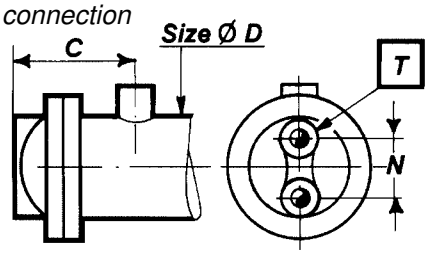

4 VIE GAS

TAGLIA *size* Ø D	SCAMBIATORE TIPO *exchanger type* FASCIO *(bundle)* FISSO *fixed* C	REMOVIBILE *removable* C	CODICI PER ORDINAZIONE 8° E 9° Carattere del codice *Code for order 8° - 9° character for code* Ø T	N	FERRO c. steel	INOX stain. steel
30XX	80	–	3/4”	25	4T	4X
40XX	80	–	3/4”	35	4T	4X
50XX	125	–	1”	40	4T	4X
60XX	146	–	1½”	45	4T	4X
80XX	198	–	2”	136	4T	4X

CONNESSIONE FILETTATA GAS UNI 338
Threaded connection

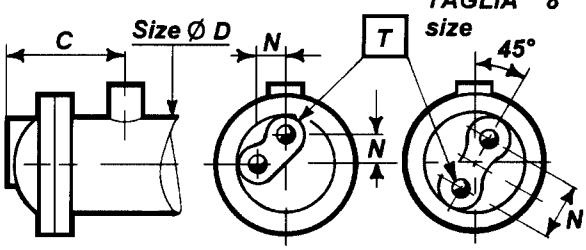

Dimensioni e caratteristiche non impegnative. Tolleranze secondo norme. - *Dimensions and characteristics of the catalogue are subject to change without notice. Clearances according to international standards.*

FLOVEX S.p.A. - 20056 Grezzago (MI) - Via Abruzzi 4/6 - TEL. 02-920192.1 - FAX 02-92019239

SCAMBIATORI
HEAT EXCHANGERS

MODULO RICHIESTA DATI *(Sheet for thermal data)*

CLIENTE *(customer):* _____

SIG. *(Mr):* _____

INDIRIZZO *(address):* _____

POTENZIALITÀ *(duty)* **1** _____ ☐ *kcal* ☐ *kW* ☐ *HP*

		Corpo ***SHELL Side***		Tubi ***TUBE Side***	
Tipo fluido & viscosità 40°C ISO *(Fluid type & viscosity) 40°C*	☐ **VG** ☐ **cP**	**2**		**5**	
Portata fluido *(Flow)*	☐ **m³/h** ☐ **l/min.**	**3**			
TEMPERATURA *(temperature)*	**°C**	*in*	*out* **4**	*in* **6**	*out*
PERDITA DI CARICO MAX. *(allowable pressure drop)*	**Bar G**				

DIMENSIONE MASSIMA LUNGHEZZA *(max length):*

IMPORTANTE! 1 ÷ 6 DATI FONDAMENTALI *(Foundamental datas)*
NB.: densità, viscosità, calore specifico oppure diagramma relativi se il fluido non è conosciuto *(density,viscosity, specific heat if the fluid is a special fluid)*

PROGETTAZIONE *(Project)*

☐ **Standard FLOVEX**	☐ FASCIO TUBIERO FISSO *(Fixed bundle)*
☐ TEMA C ASME VIII Div 1	☐ FASCIO TUBIERO ESTRAIBILE *(Removable bundle)*
☐ TEMA B ASME VIII Div 1	☐ FASCIO TUBIERO U *(U tube)*
☐ TEMA R ASME VIII Div 1	☐ ARIA CON ELETTROVENTILATORI *(Fan)*

DATI DI PROGETTO *(project data)*

☐ **Standard FLOVEX**	*Shell side pressure*	*Bar G*	_____
☐ Non standard	*Tube side pressure*	*Bar G*	_____
	Shell side temperature	*°C*	_____
	Tube side temperature	*°C*	_____

COSTRUZIONI MATERIALI *(Materials construction)*

☐ **Standard FLOVEX**	TUBI DI SCAMBIO *(Tube bundle)* _____
☐ Non standard	DIAMETRO *(Diameter)* _____ SPESSORE *(Thickness)* _____
	PIASTRA TUBIERA *(Tubesheet)* _____
	CORPO *(Shell)* _____
	COPERCHI *(Covers)* _____

NOTE: _____

Dimensioni e caratteristiche non impegnative. Tolleranze secondo norme. - *Dimensions and characteristics of the catalogue are subject to change without notice. Clearances according to international standards.*

SHEET 2001.

FLOVEX S.p.A. - 20056 Grezzago (MI) - Via Abruzzi 4/6 - TEL. 02-920192.1 - FAX 02-92019239

HR

RISCALDATORI ELETTRICI
Electric heaters

HR E

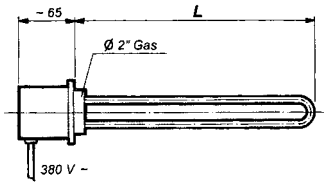

ELEMENTO RISCALDANTE
Resistenza in ferro con corpo in ottone per riscaldare olio con viscosità max ISO VG 68, da inserire direttamente nel serbatoio. Attacco filettato Ø 2" con guarnizione piana. Prevedere l'installazione in una zona di forte turbolenza per aumentare l'efficienza termica.
Potenza resa ~ 2,5 watt/cm² a 230 - 400 V; altre tensioni a richiesta.
Coperchio di protezione dei collegamenti in gomma con protezione IP 54. Esecuzione stagna antideflagrante a richiesta. Per applicazioni con differenti fluidi contattare nostro ufficio tecnico.

HEATING ELEMENT
Heating element for oil with max viscosity ISO VG 68. Body and theread in yellow brass alloy, resistance of carbon steel U bend shaped to be inserted directly into the tank. Threaded 2" B.S.P. connection to install near the part of the tank with turbolence to raise the termal efficiency.
Thermal rating about 2,5 (watt/cmsq). Standard Voltage 230/400 (other Voltages on request). Protection of cables in rubber cap, protection IP 54.
Special executions as "waterproof" and "flameproof" on request.
For applications with different fluid please contact our technical office.

ESEMPIO CODICE PRODOTTO *example of product code*	
VECCHIO - *old*	NUOVO - *new*
RE 1013	**HRE . 1013 . 000000**

	TAGLIA size						
HRE	**1013**	**1015**	**1020**	**1030**	**1040**	**1050**	**1060**
Pot. W	1300	1500	2000	3000	4000	5000	6000
L (mm)	315	415	515	615	735	615	715

HR X

RISCALDATORI ELETTRICI IN LINEA
Elemento riscaldante **HR E** inserito in un corpo. Maggiore efficienza termica senza possibilità di surriscaldamento. Ampia gamma di versioni con una o più resistenze smontabili e sostituibili. Robusto corpo in acciaio al carbonio.
Potenza resa ~ 2,5 watt/cm² - 230 - 400 V; altre tensioni a richiesta.
Coperchio di protezione dei collegamenti in gomma con protezione IP 54.
Esecuzione stagna antideflagrante a richiesta.

ELECTRIC HEATERS ON LINE
*Heating element **HR E** type fitted into a shell. For oil, gasoil, cherosene, other types, made for high efficiency, heat dynamically in full stream of flow avoiding over heating. Modular construction with one, three or four candles fitted into rugged carbon steel housing. Easy substitution of the heating elements. Thermal rating about 2.5 (watt/cmsq). Standard Voltage 230/400 (other Voltages on request). Protection of cables in rubber cap. Protection IP 54. Special executions as "waterproof" and "flameproof" on request.*

HR T

RISCALDATORI ELETTRICI IMMERSI
Elemento riscaldante **HR E** inserito in un corpo. Facile montaggio a flangia con guarnizione piana direttamente al serbatoio.
Ampia gamma di versioni con una e più resistenze smontabili e sostituibili.
Robusto corpo in acciaio al carbonio. Potenza resa ~ 2,5 watt/cm² a 230 - 400 V; altre tensioni a richiesta. Coperchio di protezione dei collegamenti in gomma con protezione IP 54. Esecuzione stagna antideflagrante a richiesta.

ELECTRIC IMMERSION HEATERS
*Heating element **HR E** type fitted into a shell. For oil our types, with flange and plain gasket to be fitted into the tank, but using the dynamic way of heating "one line" pouring the oil tank. Modular construction with one, three or four candles, rugged carbon steel housing with most part hidden in talk will solve many problems of space. Thermal rating about 2,5 (watt/cmsq). Standard Voltage 230/400 (other Voltages on request). Protection of cables in dielectric rubber cap. Protection IP 54. Special executions as "waterproof" and "flameproof" on request.*

ATTENZIONE - Per evitare eventuali danni di sovratemperatura prevedere sempre nell'impianto un elemento termostatico di sicurezza per il controllo dei vari tipi di resistenza di riscaldo.

ATTENTION - To avoid damages as burning or cracking of the fluids due to overheting, the system must be provided with thermostatic control!

Dimensioni e caratteristiche non impegnative. Tolleranze secondo norme. - *Dimensions and characteristics of the catalogue are subject to change without notice. Clearances according to international standards.*

FLOVEX S.p.A. - 20056 Grezzago (MI) - Via Abruzzi 4/6 - TEL. 02-920192.1 - FAX 02-92019239

HRX

ESEMPIO CODICE PRODOTTO *example of product code*	
VECCHIO - *old*	NUOVO - *new*
HT 1013	**HRX . 1013 . 000000**

TEMP. PROGETTO	*design temp.*	°C	220
PRESS. PROGET.	*design press.*	Bar G	10
PRESS. PROVA	*test pressure*	Bar G	13
DATI DI PROGET.	*design data*	U.M.	SHELL

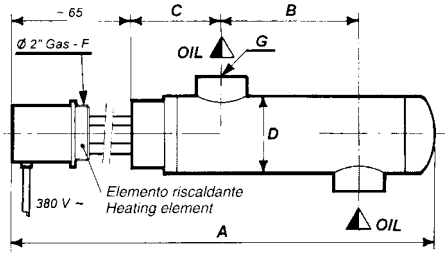

TYPE HRX 1

Portata min	*Flow min*	**2**	m³/h
Portata max	*Flow max*	**18**	m³/h

Nr. 1 Elemento riscaldante *Heating element*

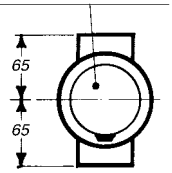

Taglia size	kW	A	B	C	D	Ø G
1013	1.3	390	180	75	83	1½"
1015	1.5	490	280			
1020	2	590	380			
1030	3	690	480			
1040	4	810	600			
1050	5	690	480			
1060	6	790	580			

TYPE HRX 3

Portata min	*Flow min*	**6**	m³/h
Portata max	*Flow max*	**36**	m³/h

Nr. 3 Elementi riscaldanti *Heating elements*

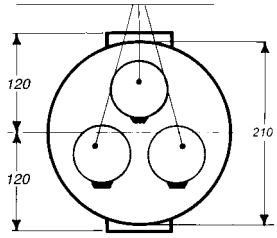

Taglia size	kW	A	B	C	D	Ø G
3039	3.9	420	150	95	168	2"
3045	4.5	520	250			
3060	6	620	350			
3090	9	720	450			
3120	12	840	570			
3150	15	720	450			
3180	18	820	550			

TYPE HRX 4

Portata min	*Flow min*	**9**	m³/h
Portata max	*Flow max*	**60**	m³/h

Nr. 3 Elementi riscaldanti *Heating elements*

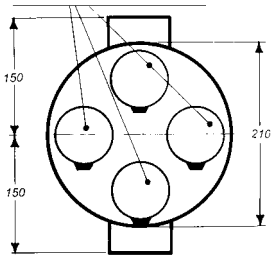

Taglia size	kW	A	B	C	D	Ø G
4052	5.2	460	150	105	219	2"
4060	6	560	250			
4080	8	660	350			
4120	12	760	450			
4160	16	880	570			
4200	20	760	450			
4240	24	860	550			

HRT

ESEMPIO CODICE PRODOTTO *example of product code*	
VECCHIO - *old*	NUOVO - *new*
HS 1013	**HRT . 1013 . 000000**

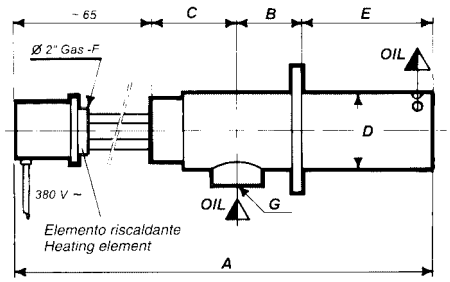

TYPE HRT 1

Portata min	*Flow min*	**2**	m³/h
Portata max	*Flow max*	**18**	m³/h

Nr. 1 Elemento riscaldante *Heating element*

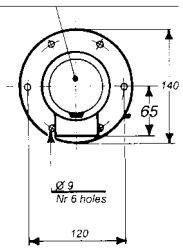

Taglia size	kW	A	B	C	D	E
1013	1.3	380	70	75	83	170
1015	1.5	480				270
1020	2	580				370
1030	3	680				470
1040	4	800				590
1050	5	680				470
1060	6	780				570

TYPE HRT 3

Portata min	*Flow min*	**6**	m³/h
Portata max	*Flow max*	**36**	m³/h

Nr. 3 Elementi riscaldanti *Heating elements*

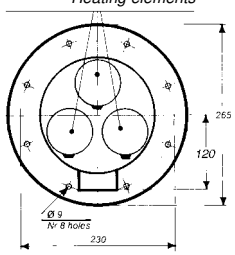

Taglia size	kW	A	B	C	D	E
3039	3.9	385	80	95	168	145
3045	4.5	485				245
3060	6	585				345
3090	9	685				445
3120	12	805				565
3150	15	685				445
3180	18	785				545

TYPE HRT 4

Portata min	*Flow min*	**9**	m³/h
Portata max	*Flow max*	**60**	m³/h

Nr. 3 Elementi riscaldanti *Heating elements*

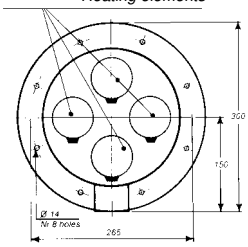

Taglia size	kW	A	B	C	D	E
4052	5.2	380	80	115	219	130
4060	6	480				230
4080	8	580				330
4120	12	680				430
4160	16	800				550
4200	20	680				430
4240	24	780				530

Dimensioni e caratteristiche non impegnative. Tolleranze secondo norme. - *Dimensions and characteristics of the catalogue are subject to change without notice. Clearances according to international standards.*

FLOVEX S.p.A. - 20056 Grezzago (MI) - Via Abruzzi 4/6 - TEL. 02-920192.1 - FAX 02-92019239

RS A

SCAMBIATORI AD ARIA IN ALLUMINIO

Air coolers aluminium block

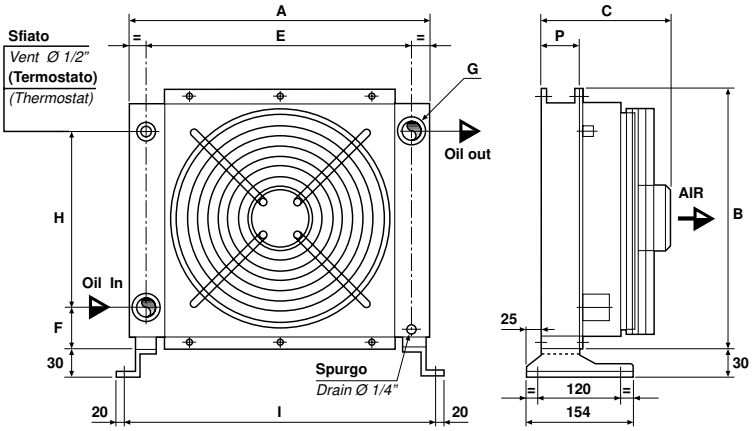

Model	A	B	C 12Vcc	C 24Vcc	C 220Vac	C 400Vac	E	H	G Ø Gas F	F	I	P
RSA.2404	315	275	147	147	170	133	275	185	3/4"	45	340	45
RSA.2406	335	275	162	162	190	148	285	185	1"	60	340	60
RSA.3406	440	375	172	172	200	201	390	255	1"	60	465	60
RSA.4706	610	510	206	206	200	216	540	390	1 1/2"	60	595	60
RSA.4709	610	510	236	236	230	246	540	390	1 1/2"	60	595	90

Materiale

Massa radiante : Alluminio
Ventola : Alluminio o plastica rinforzata
Convogliatore, griglia di protezione : Acciaio al carbonio

Termostati disponibili (Contatti N.A.)

TA : Protezione IP 54 48°C
TB : Protezione IP 65 48°C
TBR : Protezione IP 65 40°C ÷ 85°C

Gli scambiatori ARIA/OLIO serie **RSA** sono realizzati mediante l'impiego di una robusta massa radiante in alluminio con canali di passaggio muniti di turbolatori per aumentare l'efficienza termica.

Il profilo laterale, senza le connessioni, consente un più facile montaggio e necessita di un minore ingombro frontale.

La rumorosità è contenuta in un valore max di 76 dB(A) / 1m.

I piedi di fissaggio sono smontabili ed orientabili in diverse posizioni con l'interposizione di elementi antivibranti in gomma.

Un'attenta scelta della forma del convogliatore d'aspirazione consente di sfruttare al meglio il flusso d'aria.

Sono previste esecuzioni speciali con motori antideflagranti.

Material

Main cooler Body : Aluminium
Fan : Aluminium or Hard plastic
Fan protection : Carbon steel

Thermostat optional (Contact N. O.)

TA *: Protection IP 54 48°C*
TB *: Protection IP 65 48°C*
TBR *: Protection IP 65 40°C ÷ 85°0*

*Air-oil coolers of **RSA series** are realized by a strong aluminium radiant mass with passing canals equiped with turbolence device in order to increase the thermic efficiency*

The overall side profile allows an easy assemble of the cooler since there isn't the hindrance caused by the connections and consequentely it needs a smaller room.

The noise factor is 76 dB(A) at 1 mt maximum.

The support saddles can be desmantled and oriented in different positions. The saddles are equipped with anti-vibrations rubber device.

A correct choise of extractor plenum frame let to exploit completely the air-flow.

Special executions with EEXD motor are available.

Dimensioni e caratteristiche non impegnative. Tolleranze secondo norme. - *Dimensions and characteristics of the catalogue are subject to change without notice. Clearances according to international standards.*

FLOVEX S.p.A. - 20056 Grezzago (MI) - Via Abruzzi 4/6 - TEL. 02-920192.1 - FAX 02-92019239

RS A

SCAMBIATORI AD ARIA IN ALLUMINIO

Air coolers aluminium block

Diagrammi di rendimento e selezione dello scambiatore ideale

Consentono di selezionare il modello sulla base della potenzialità termica da smaltire, della temperatura di ingresso dell'olio, della temperatura massima dell'aria e della portata dell'olio.

Sull'asse delle ascisse viene indicata la portata dell'olio in litri per minuto, sulle ordinate viene indicato il rendimento η, come rapporto tra la potenzialità termica (espressa in kcal/h) e la differenza tra la temperatura massima di ingresso olio e la temperatura massima dell'aria (entrambe in °C o °K).

$$\eta = \text{Rendimento} = \frac{\text{Q, potenzialità, kcal / h}}{\text{DTo}}$$

DTo = Ingresso olio - T massima aria °C *oppure* °K

Efficiency Diagrams and selection of ideal cooler size

Ideal cooler size selection from the diagram is based on the duty, inlet oil temperature, maximum air temperature, and oil flow.

Oil flow (lt per min) is indicated on X-axis. On Y axis the efficiency, η, is reported as ratio between maximum oil inlet temperature and maximum air temperature (°C or °K).

$$\eta = \textit{Efficiency} = \frac{\textit{Q, duty, kcal / h}}{\textit{DTo}}$$

DTo = Inlet oil - T max air °C or °K

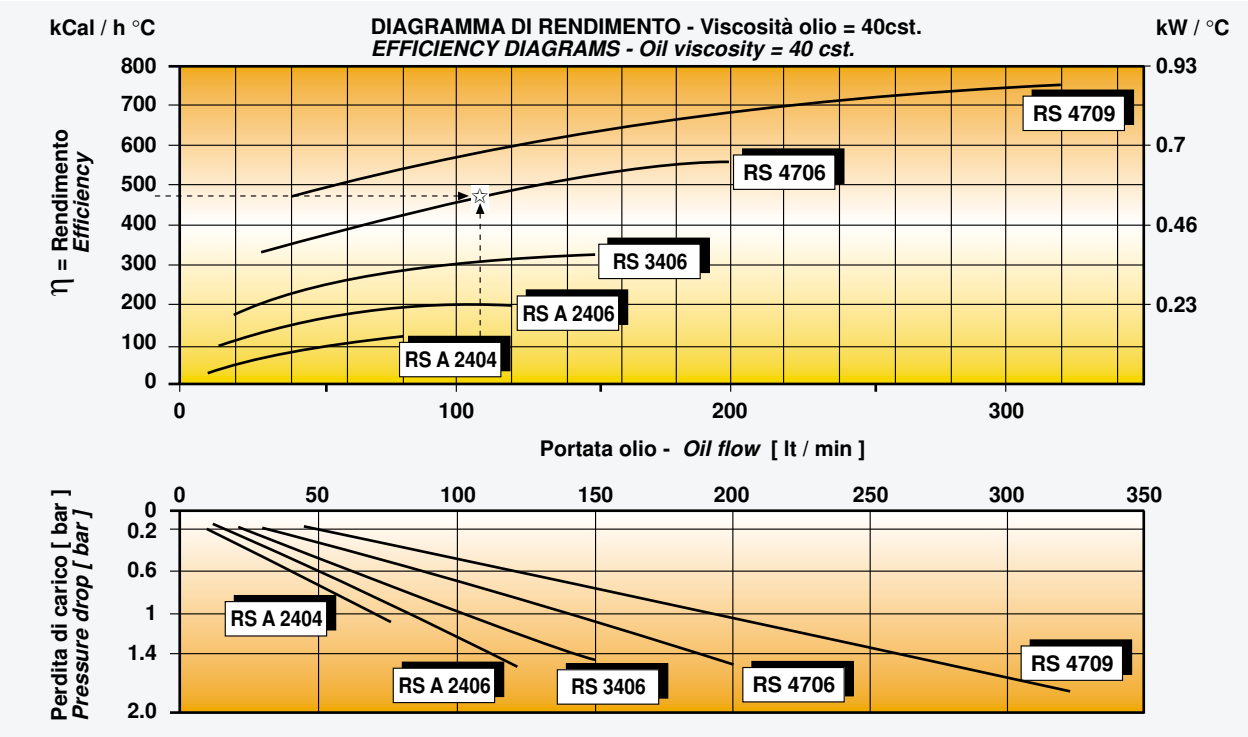

Calcolo della potenzialità termica

Nel caso non sia conosciuto il valore della potenzialità termica, questi può essere calcolato con la seguente formula:

$$\boxed{Q = Cp \times \gamma \times G \times DT}$$

dove:

Q	= potenzialità termica	= kcal / h
Cp	= calore specifico	= kcal / kg°C
γ	= peso specifico	= kg / m³
G	= portata olio	= lt / h
DT	= ingresso olio - T uscita olio	= °C *oppure* °K

Nel caso di un olio minerale di cui non si conoscano calore specifico e/o la densità, si può considerare con buona approssimazione il valore:

$$\boxed{Cp \times \gamma = 0.4} \quad \text{[kcal / lt °C h]}$$

Esempio: T olio ingresso = 70°C, T olio uscita = 63°C,
Portata = 100 (lt / min) x 60 = 6.000 lt / h
Q = 0.4 x 6.000 x 7 = **16.800 kcal / h**

Calculation of the duty

If the duty is unknown, it can be calculated by the following formula:

$$\boxed{Q = Cp \times \gamma \times G \times DT}$$

where:

Q	*= duty*	*= kcal / h*
Cp	*= specific heat*	*= kcal / kg°C*
γ	*= specific weight*	*= kg / m³*
G	*= oil flow*	*= lt / h*
DT	*= inlet oil - T outlet oil*	*= °C or °K*

For a mineral oil tipical values of specific Heat and specific weight are the following:

$$\boxed{Cp \times \gamma = 0.4} \quad \textit{[kcal / lt °C h]}$$

Example: *T inlet oil = 70°C, T outlet oil = 63°C,*
Flow = 100 (lt / min) x 60 = 6.000 lt / h
Q** = 0.4 x 6.000 x 7 = **16.800 kcal / h

Dimensioni e caratteristiche non impegnative. Tolleranze secondo norme. - *Dimensions and characteristics of the catalogue are subject to change without notice. Clearances according to international standards.*

FLOVEX S.p.A. - 20056 Grezzago (MI) - Via Abruzzi 4/6 - TEL. 02-920192.1 - FAX 02-92019239

LT

SCAMBIATORI AD ARIA
Aircoolers

CARATTERISTICHE GENERALI
Gli scambiatori serie **LT**, con raffreddamento forzato ad aria, si pongono quale valida alternativa all'impiego dei tradizionali scambiatori a fascio tubiero, qualora non si disponga di acqua o se ne voglia evitare il consumo.
Particolare cura è stata posta allo studio dei vari componenti per raggiungere elevata efficienza termica e robustezza.
Per una totale affidabilità ogni apparecchio viene collaudato a 30 Bar.

PERDITE DI CARICO
Al fine di ottimizzare i rendimenti con un giusto valore di caduta di pressione, vengono proposte due versioni di apparecchi
- tipo A per portate medio-basse
- tipo B per portate più alte.

Le perdite di carico indicate nei diagrammi di rendimento sono calcolate per olio con viscosità 4°E a 50°C. Con olio più viscoso o con temperature di funzionamento più basse si hanno variazioni sostanziali dei valori. Per evitare danni all'impianto in particolare durante l'avviamento a freddo, si consiglia di escludere lo scambiatore dal circuito mediante l'inserimento di un by-pass tarato alla pressione di 4-5 Bar.

APPLICAZIONI SPECIALI
Gli scambiatori serie **LT** possono essere utilizzati, oltre che per il raffreddamento dell'olio, per i più svariati fluidi e gas in pressione, compatibilmente coi materiali impiegati.
È prevista la realizzazione, su richiesta, di unità speciali, multipli dei modelli base, di cui si mantengono le caratteristiche costruttive, raggiungendo anche potenzialità di scambio molto elevate. Il ns. ufficio tecnico dispone di un collaudato sistema di calcolo computerizzato in grado di simulare le reali condizioni di lavoro per ottimizzare le scelte e ne fornisce una specifica termica completa di tutti i dati di funzionamento.

CARATTERISTICHE COSTRUTTIVE
Per garantire elevate pressioni di esercizio resistenza alle vibrazioni ed elevato scambio termico si utilizza un pacco radiante composto da alette continue di alluminio, fissate ai tubi di rame mediante espansione meccanica.
I collettori sono dimensionati per consentire il passaggio dell'olio alla portata prevista.
Ogni apparecchio è corredato da un termostato a taratura fissa, da collegare al motore, per l'inserimento della ventola alla temperatura di 40-48°C.
Motore elettrico e ventola sono previsti per funzionamento al 100% e con livello di rumorosità particolarmente basso.

GARANZIA
Ogni apparecchio è garantito contro i difetti di fabbricazione o dei materiali per la durata di mesi 12. Nessuna garanzia contro la corrosione, vibrazioni eccessive, colpi di ariete, incrostazioni ed errato montaggio.

GENERAL CHARACTERISTICS
The fan exchangers, cooling with forced airdraft, are an extremely valid alternative to tube & shell exchangers, where no cooling water is available.
Particular care has been taken to select all components able to give good thermal efficiency together with rugged construction. To reach complete affidability all our fancoolers are tested at 30 (Bar).

FLOWRATE & PRESSURE DROP
To optimise efficiency against allowable pressure drop, coolers are of two types: low flowrate = type "A"; high flowrate = type "B".
Pressure drop indicated on the performance curves are intended with oil viscosity of 4°E-50°C. With other oils than the mentioned, proper calculation should be made. Specially with cold start of the machine at low temperatures a by-pass should be used, with pressure setting of 4-5 (Bar).

SPECIAL APPLICATIONS
Fan-type exchangers could also be used for compressed air, other gas, water, depending on fan materials.
The versatility of our design allows us to make multiple of our basic models, two or more standard or special fans & motors, more rows of tubes with tubelength according to proper computerised calculation.
Heat transfer calculation and fancooler size optimization made by simulation of real conditions with our computer, to minimise possible errors, giving specification sheet complete with constructional and heat transfer data available from our technical department for each project.

CONSTRUCTION
Copper innertubes of small diameter expanded to integral aluminium fins, punched with small lips to extend contact surface, and to give protection against vibration.
Inlet/outlet connections in carbon steel pipe sized to take flow at nominal pressure.
Each cooler is supplied with thermostatic contact to insert the fan between 40-48 °C.
Electric motor & fan able to operate 100% of time, with low noise.

WARRANTY
Each exchanger is guaranteed against defect of fabbrication, or of the materials for 12 months.
No guarantee will be hold against corrosion, excessive vibrations, pressure hammering, calcium deposit and uncorrect installation.

Dimensioni e caratteristiche non impegnative. Tolleranze secondo norme. - *Dimensions and characteristics of the catalogue are subject to change without notice. Clearances according to international standards.*

FLOVEX S.p.A. - 20056 Grezzago (MI) - Via Abruzzi 4/6 - TEL. 02-920192.1 - FAX 02-92019239

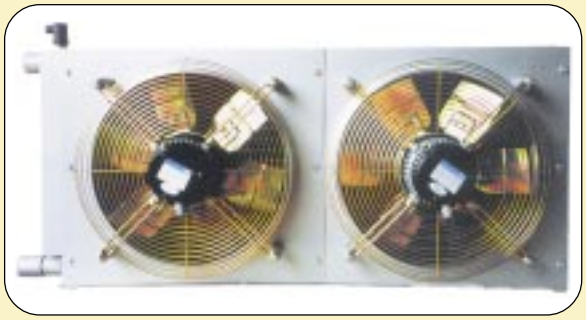

Scambiatore ad aria tipo **LT D** con doppio elettroventilatore.

*Double fancooler type **LTD** with two motors ventilators.*

Scambiatore speciale completamente in inox AISI 316 con motore antideflagrante per impianto idraulico in ambiente geotermico altamente corrosivo.

Special cooler completely in stainless steel AISI 316 with flameproof motor for hydraulic equipment working in geothermic highly corrosive site.

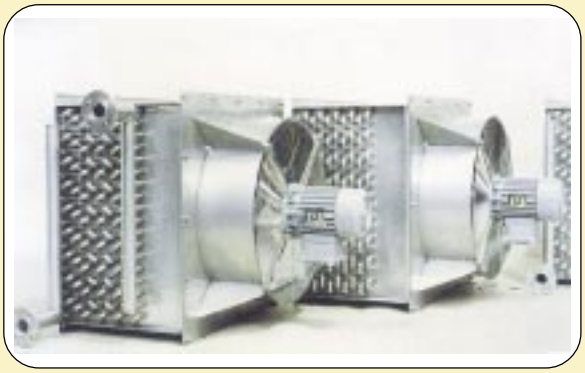

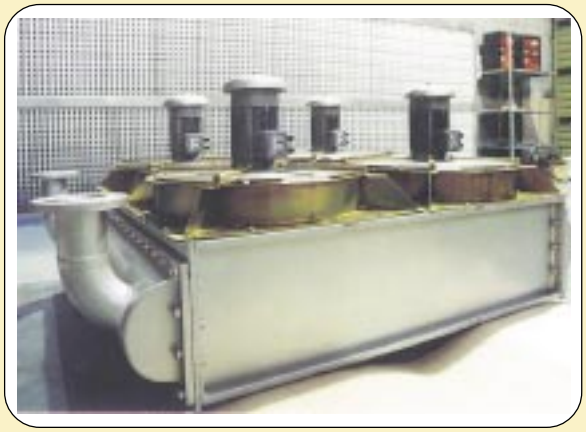

Scambiatore ad aria con grande potenzialità termica per impianto chimico.

Aircooler for high dutyrating for chemical plant.

Scambiatori con raffreddamento ad aria per ambienti pericolosi e in applicazioni gravose. Realizzazione secondo norme con tubi alettati in rame, alluminio, inox, titanio, ecc.

Heavy duty aricooled exchangers to suite most codes, flameproof and hazardous applications. Made with bare or finned tubes. Materials as carbon steel, copper alloys, stainless or light alloy to suite most prescriptions.

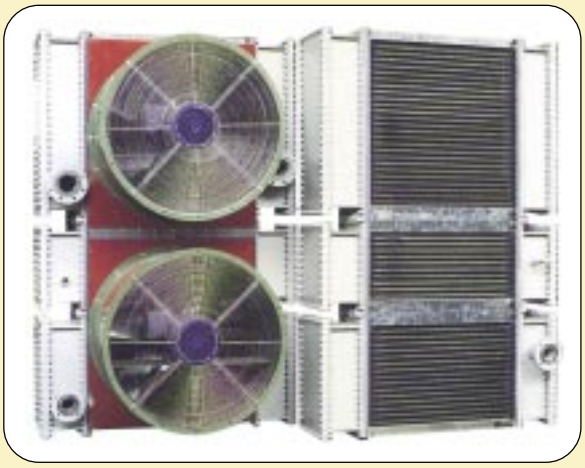

LT O

SCAMBIATORI AD ARIA BASSA POTENZIALITÀ

Aircoolers
Low duty

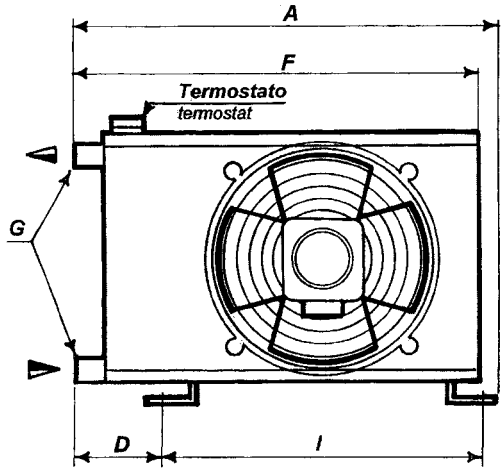

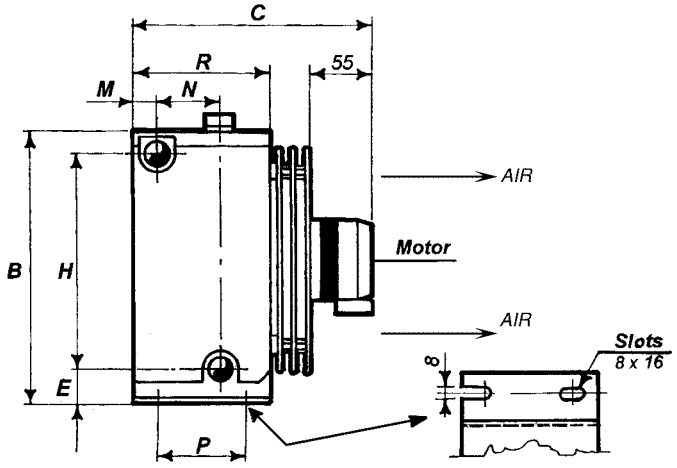

ESEMPIO CODICE PRODOTTO *example of product code*	
VECCHIO - *old*	NUOVO - *new*
LT - 1.3 - A - 12V	**LTO . 0103 . AD0000**

TEMP. PROGETTO	*design temperat.*	°C	99
PRESS. PROGETTO	*design pressure*	**Bar G**	10
PRESSIONE PROVA	*test pressure*	**Bar G**	13
DATI DI PROGETTO	*design data*	**U.M.**	TUBES

VERNICIATO - *Painting* = **RAL 7381**

VECCHIA SIGLA *Old size*	**TAGLIA** size	**A**	**B**	**C**	**D**	**E**	**F**	**H**	**I**	**M**	**N**	**P**	**R**	**Ø G**	MOTORE ELETTRICO electric motor
LT 1.3	**0103**	335	230	205	75	40	320	175	250	15	50	75	108	1/2"	48W - 230V~ 1 Phase
LT 2.3	**0203**	415	285	205	100	45	400	220	300	15	40	75	108	3/4"	65W - 230V~ 1 Phase
LT 3.4	**0304**	530	385	270	115	50	515	315	400	35	55	120	150	1"	50W - 400V~ 3 Phase

Nota: tutti i modelli sono disponibili anche con motore elettrico in corrente continua 12 V o 24 V

Note: all the models are availables with electrical motors 12 V (dc) or 24 V (dc)

TERMOSTATI DISPONIBILI: (CONTATTI N.A.)
TA: standard, protezione IP 44 taratura fissa 48°C +/– 12°C
TB: opzionale, protezione IP 65 taratura fissa 48°C +/– 8°C

THERMOSTAT OPTIONAL: *(CONTACT N.O.)*
TA: standard type, protection IP 44 fixed range 48°C +/– 12°C
TB: opzional type, protection IP 65 fixed range 48°C +/– 8°C

DIAGRAMMI DI RENDIMENTO
Diagrammi validi per olio idraulico 4°E a 40°C alla temperatura di 50°C.

HEAT TRANSFER CURVES
The curves are valides for hydraulic oil 4°E at 40°C at medium temperature of 50°C.

① = Δt 15°C
② = Δt 25°C
③ = Δt 35°C
(Δt = T OIL - t AIR)

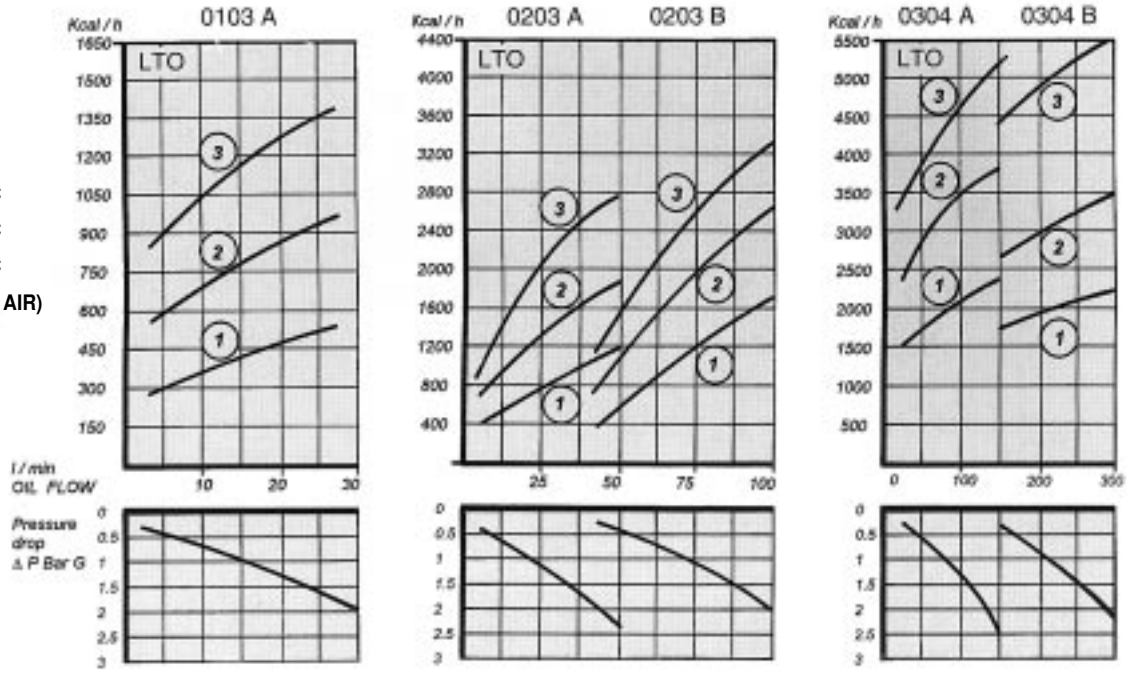

Dimensioni e caratteristiche non impegnative. Tolleranze secondo norme. - *Dimensions and characteristics of the catalogue are subject to change without notice. Clearances according to international standards.*

FLOVEX S.p.A. - 20056 Grezzago (MI) - Via Abruzzi 4/6 - TEL. 02-920192.1 - FAX 02-92019239

LT O

SCAMBIATORI AD ARIA MEDIA POTENZIALITÀ

Aircoolers
Medium duty

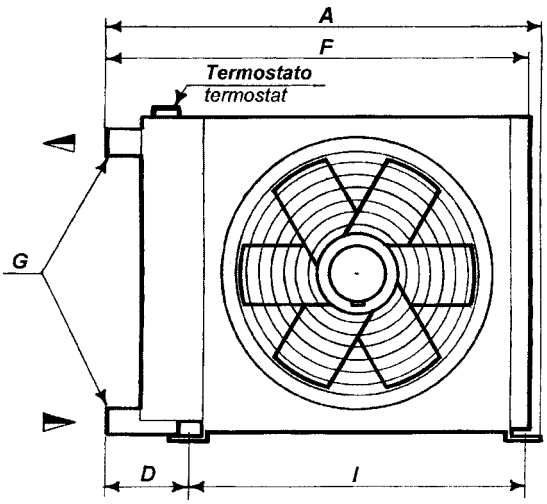

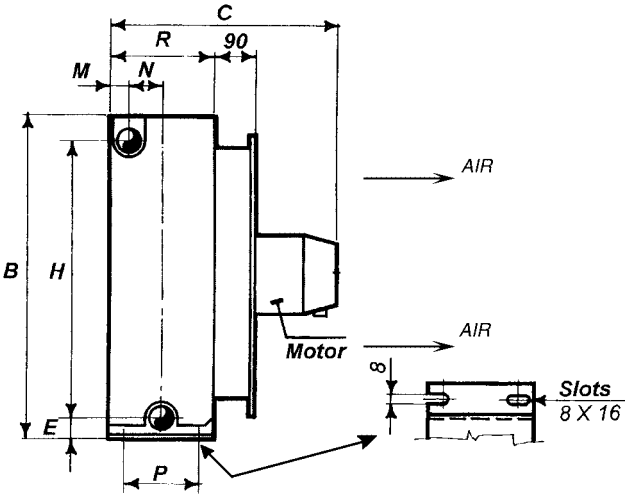

ESEMPIO CODICE PRODOTTO *example of product code*	
VECCHIO - *old*	NUOVO - *new*
LT - 5.4 - A - 220	**LTO . 0504 . A20000**

TEMP. PROGETTO	*design temperat.*	**°C**	99
PRESS. PROGETTO	*design pressure*	**Bar G**	10
PRESSIONE PROVA	*test pressure*	**Bar G**	13
DATI DI PROGETTO	*design data*	**U.M.**	TUBES

VERNICIATO - *Painting* = **RAL 7381**

VECCHIA SIGLA *Old size*	**TAGLIA** size	**A**	**B**	**C**	**D**	**E**	**F**	**H**	**I**	**M**	**N**	**P**	**R**	**Ø G**	MOTORE ELETTRICO electric motor
LT 5.4	**0504**	710	510	300	130	30	700	455	550	30	50	120	170	1¼"	80W - 400V~ 3 Phase
LT 7.4	**0704**	965	735	420	155	30	955	680	780	30	50	140	190	1½"	250W - 400V~ 3 Phase
LT 7.8	**0708**	965	735	510	155	30	955	680	780	30	140	230	280	1½"	730W - 400V~ 3 Phase

TERMOSTATI DISPONIBILI: (CONTATTI N.A.)
TA: standard, protezione IP 44 taratura fissa 48°C +/– 12°C
TB: opzionale, protezione IP 65 taratura fissa 48°C +/– 8°C

THERMOSTAT OPTIONAL: *(CONTACT N.O.)*
TA: standard type, protection IP 44 fixed range 48°C +/– 12°C
TB: opzional type, protection IP 65 fixed range 48°C +/– 8°C

DIAGRAMMI DI RENDIMENTO
Diagrammi validi per olio idraulico 4°E a 40°C alla temperatura di 50°C.

HEAT TRANSFER CURVES
The curves are valides for hydraulic oil 4°E at 40°C at medium temperature of 50°C.

① = Δt 15°C
② = Δt 25°C
③ = Δt 35°C
(Δt = T OIL - t AIR)

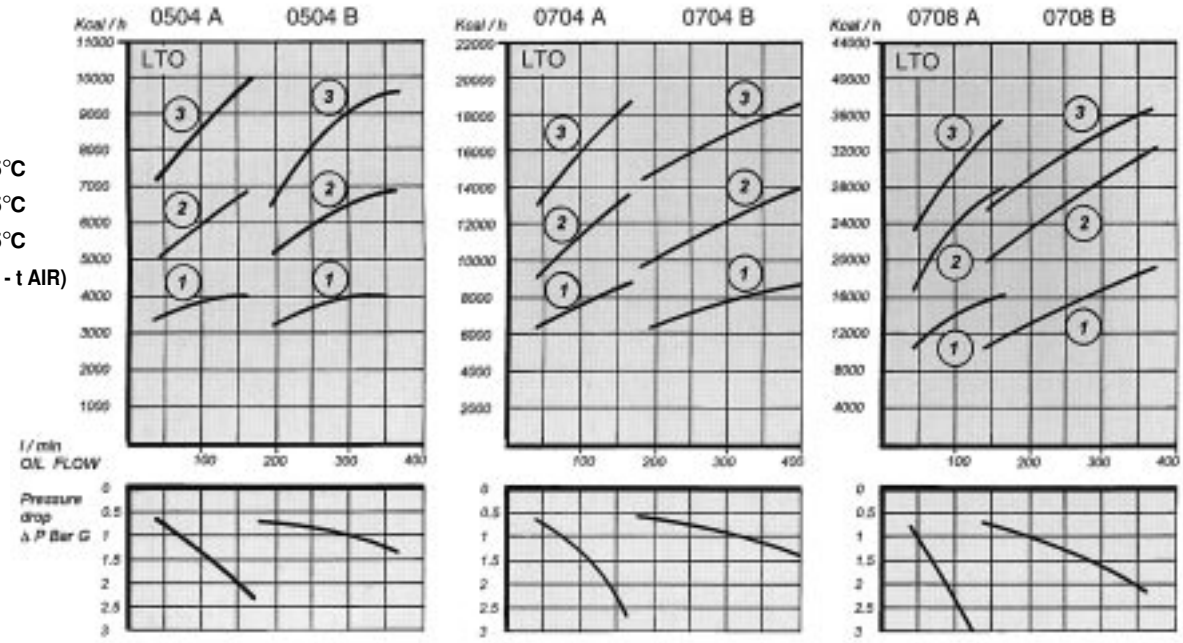

Dimensioni e caratteristiche non impegnative. Tolleranze secondo norme. - *Dimensions and characteristics of the catalogue are subject to change without notice. Clearances according to international standards.*

FLOVEX S.p.A. - 20056 Grezzago (MI) - Via Abruzzi 4/6 - TEL. 02-920192.1 - FAX 02-92019239

LT D

SCAMBIATORI AD ARIA DOPPIO MOTORE

Aircoolers
Double motors

SCAMBIATORI
HEAT EXCHANGERS

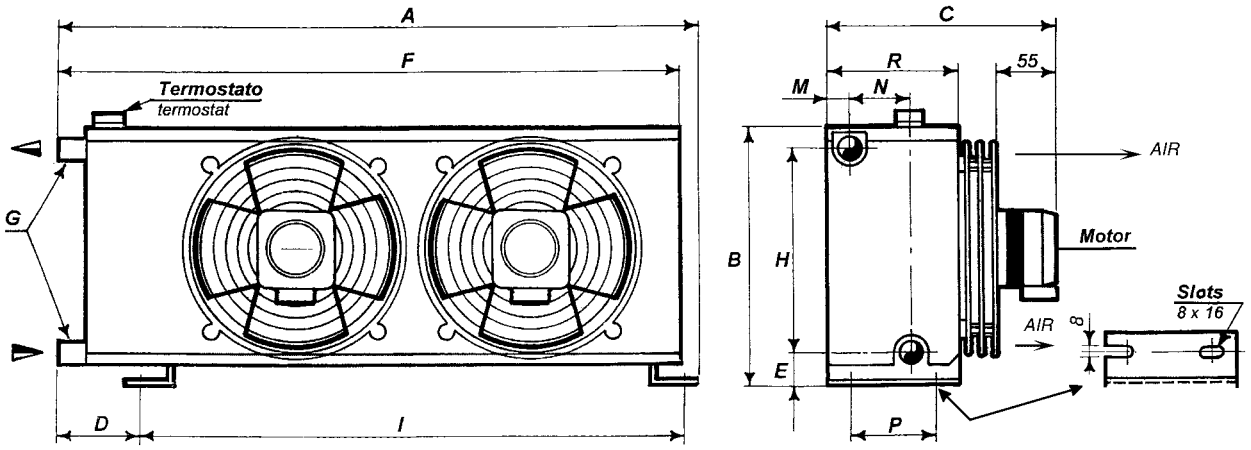

ESEMPIO CODICE PRODOTTO *example of product code*	
VECCHIO - *old*	NUOVO - *new*
LTD - 1.3 - A - 12V	**LTD . 0103 . AD0000**

TEMP. PROGETTO	*design temperat.*	°C	99
PRESS. PROGETTO	*design pressure*	**Bar G**	10
PRESSIONE PROVA	*test pressure*	**Bar G**	13
DATI DI PROGETTO	*design data*	**U.M.**	TUBES

VERNICIATO - *Painting* = **RAL 7381**

VECCHIA SIGLA *Old size*	**TAGLIA** size	**A**	**B**	**C**	**D**	**E**	**F**	**H**	**I**	**M**	**N**	**P**	**R**	**Ø G**	MOTORE ELETTRICO electric motor
LT 1.3	**0103**	535	230	205	75	40	520	175	450	15	50	75	108	1/2"	2 x 48W - 230V~ 1 Phase
LT 2.3	**0203**	665	285	205	100	45	650	220	550	15	40	75	108	3/4"	2 x 65W - 230V~ 1 Phase
LT 3.4	**0304**	880	385	270	115	50	865	315	750	35	55	120	150	1"	2 x 50W - 400V~ 3 Phase

Nota: tutti i modelli sono disponibili anche con motore elettrico in corrente continua 12 V o 24 V

Note: all the models are availables with electrical motors 12 V (dc) or 24 V (dc)

TERMOSTATI DISPONIBILI: (CONTATTI N.A.)
TA: standard, protezione IP 44 taratura fissa 48°C +/– 12°C
TB: opzionale, protezione IP 65 taratura fissa 48°C +/– 8°C

***THERMOSTAT OPTIONAL**: (CONTACT N.O.)*
TA: standard type, protection IP 44 fixed range 48°C +/– 12°C
TB: opzional type, protection IP 65 fixed range 48°C +/– 8°C

DIAGRAMMI DI RENDIMENTO
Diagrammi validi per olio idraulico 4°E a 40°C alla temperatura di 50°C.

HEAT TRANSFER CURVES
The curves are valides for hydraulic oil 4°E at 40°C at medium temperature of 50°C.

① = Δt 15°C
② = Δt 25°C
③ = Δt 35°C
(Δt = T OIL - t AIR)

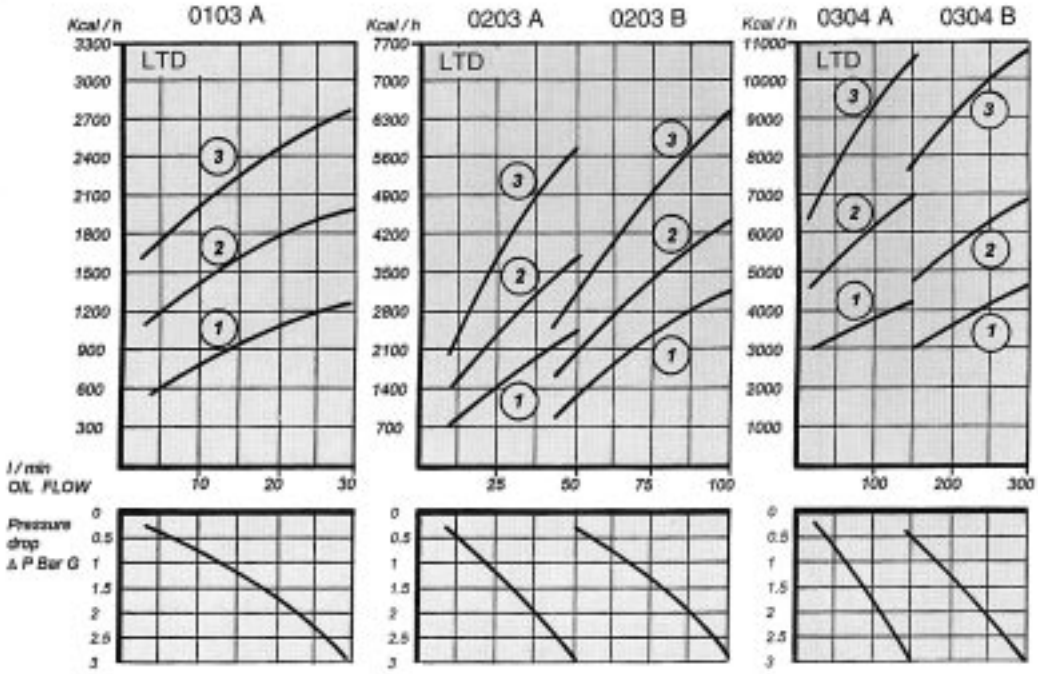

Dimensioni e caratteristiche non impegnative. Tolleranze secondo norme. - *Dimensions and characteristics of the catalogue are subject to change without notice. Clearances according to international standards.*

SHEET 2001.130

LT D

SCAMBIATORI AD ARIA DOPPIO MOTORE

Aircoolers
Double motors

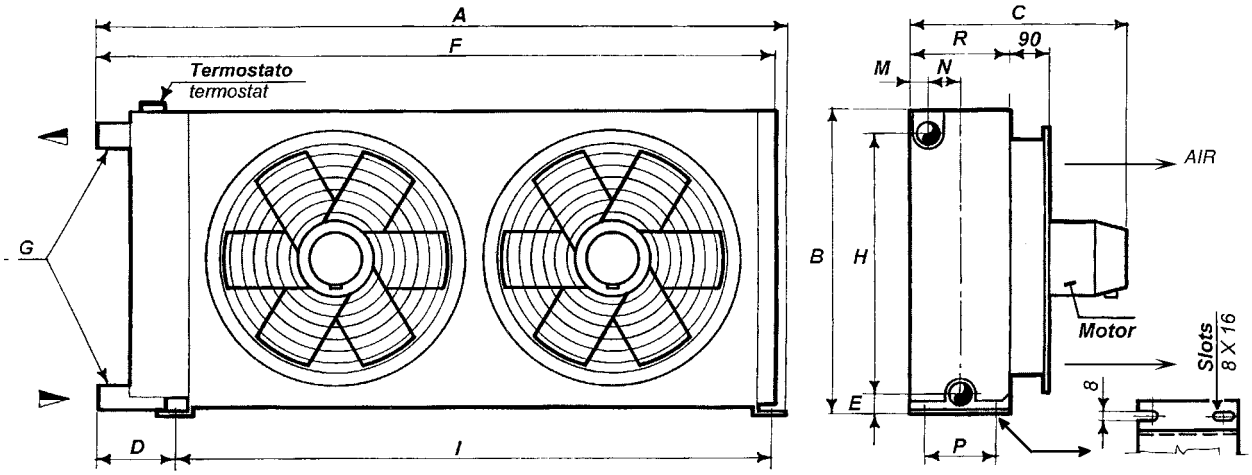

ESEMPIO CODICE PRODOTTO *example of product code*	
VECCHIO - *old*	NUOVO - *new*
LTD - 5.4 - A - 220	**LTD . 0504 . A20000**

TEMP. PROGETTO	*design temperat.*	**°C**	99
PRESS. PROGETTO	*design pressure*	**Bar G**	10
PRESSIONE PROVA	*test pressure*	**Bar G**	13
DATI DI PROGETTO	*design data*	**U.M.**	TUBES

VERNICIATO - *Painting* = **RAL 7381**

VECCHIA SIGLA *Old size*	**TAGLIA** size	**A**	**B**	**C**	**D**	**E**	**F**	**H**	**I**	**M**	**N**	**P**	**R**	**Ø G**	MOTORE ELETTRICO electric motor
LT 5.4	**0504**	1210	510	300	130	30	1200	455	1050	30	50	120	170	1¼"	2 x 80W - 400V~ 3 Phase
LT 7.4	**0704**	1695	735	420	155	30	1685	680	1510	30	50	140	190	1½"	2 x 250W - 400V~ 3 Phase
LT 7.8	**0708**	1695	735	510	155	30	1685	680	1510	30	140	230	280	1½"	2 x 730W - 400V~ 3 Phase

TERMOSTATI DISPONIBILI: (CONTATTI N.A.)
TA: standard, protezione IP 44 taratura fissa 48°C +/– 12°C
TB: opzionale, protezione IP 65 taratura fissa 48°C +/– 8°C

THERMOSTAT OPTIONAL: *(CONTACT N.O.)*
TA: standard type, protection IP 44 fixed range 48°C +/– 12°C
TB: opzional type, protection IP 65 fixed range 48°C +/– 8°C

DIAGRAMMI DI RENDIMENTO
Diagrammi validi per olio idraulico 4°E a 40°C alla temperatura di 50°C.

HEAT TRANSFER CURVES
The curves are valides for hydraulic oil 4°E at 40°C at medium temperature of 50°C.

① = Δt 15°C
② = Δt 25°C
③ = Δt 35°C
(Δt = T OIL - t AIR)

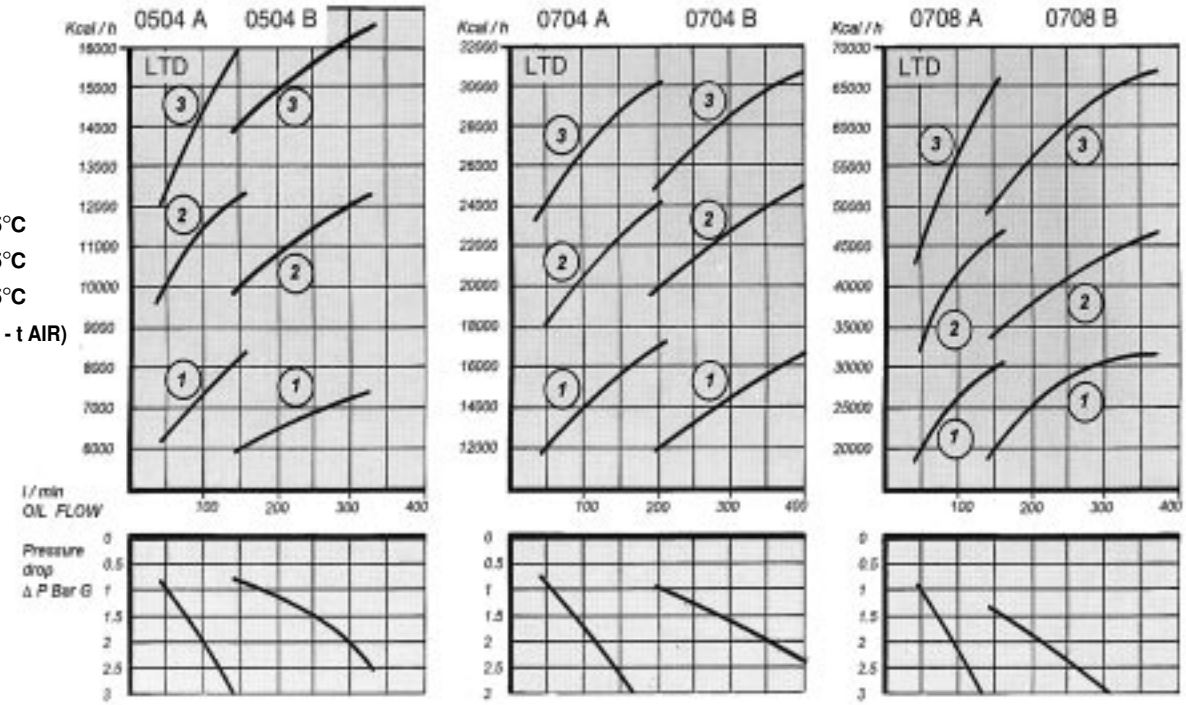

Dimensioni e caratteristiche non impegnative. Tolleranze secondo norme. - *Dimensions and characteristics of the catalogue are subject to change without notice. Clearances according to international standards.*

FLOVEX S.p.A. - 20056 Grezzago (MI) - Via Abruzzi 4/6 - TEL. 02-920192.1 - FAX 02-92019239

LTF

SCAMBIATORI AD ARIA ALTA POTENZIALITÀ

Aircoolers
High duty

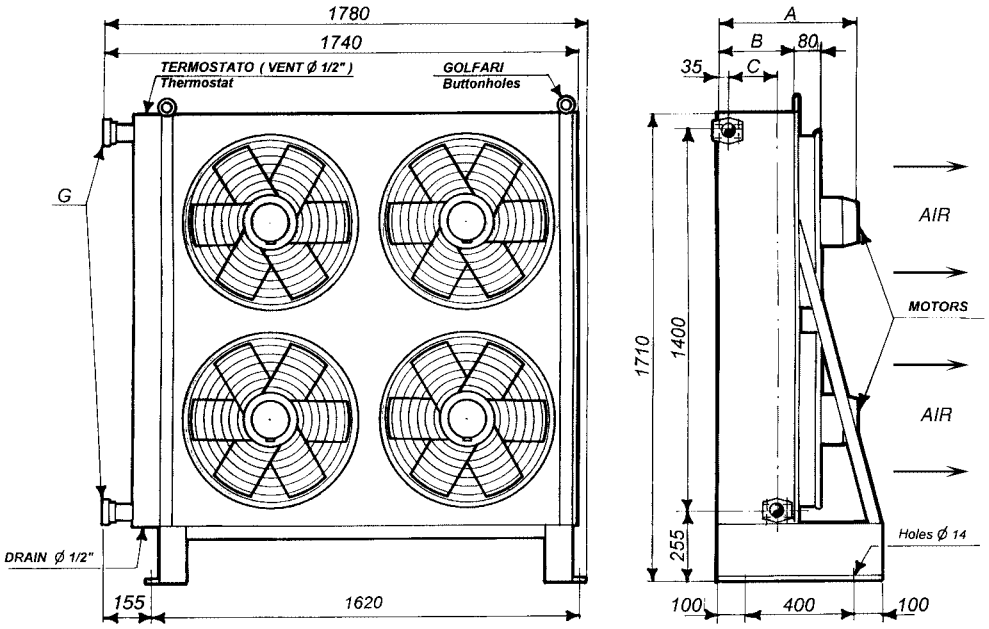

VERNICIATO -
Painting = **RAL 7381**

VECCHIA SIGLA *Old size*	**TAGLIA** size	**A**	**B**	**C**	**Ø G**	MOTORE ELETTRICO *electric motor*
14.4	**1404**	400	190	65	2" SAE 3000 #	2 x 250W - 400V~ 3 Phase
14.8	**1408**	490	280	185	2" SAE 3000 #	2 x 730W - 400V~ 3 Phase

TEMP. PROGETTO	*design temperat.*	**°C**	99
PRESS. PROGETTO	*design pressure*	**Bar G**	10
PRESSIONE PROVA	*test pressure*	**Bar G**	13
DATI DI PROGETTO	*design data*	**U.M.**	TUBES

FLANGE OPZIONALI: ANSI - UNI - GAS/F - GAS/M - NPT/F

FLANGE OPTIONAL: *ANSI - UNI - GAS/F - GAS/M - NTP/F*

TERMOSTATI DISPONIBILI: (CONTATTI N.A.)
TA: standard, protezione IP 44 taratura fissa 48°C +/– 12°C
TB: opzionale, protezione IP 65 taratura fissa 48°C +/– 8°C

THERMOSTAT OPTIONAL: *(CONTACT N.O.)*
TA: standard type, protection IP 44 fixed range 48°C +/– 12°C
TB: opzional type, protection IP 65 fixed range 48°C +/– 8°C

DIAGRAMMI DI RENDIMENTO
Diagrammi validi per olio idraulico 4°E a 40°C alla temperatura di 50°C.

HEAT TRANSFER CURVES
The curves are valides for hydraulic oil 4°E at 40°C at medium temperature of 50°C.

① = Δt 15°C
② = Δt 25°C
③ = Δt 35°C
(Δt = T OIL - t AIR)

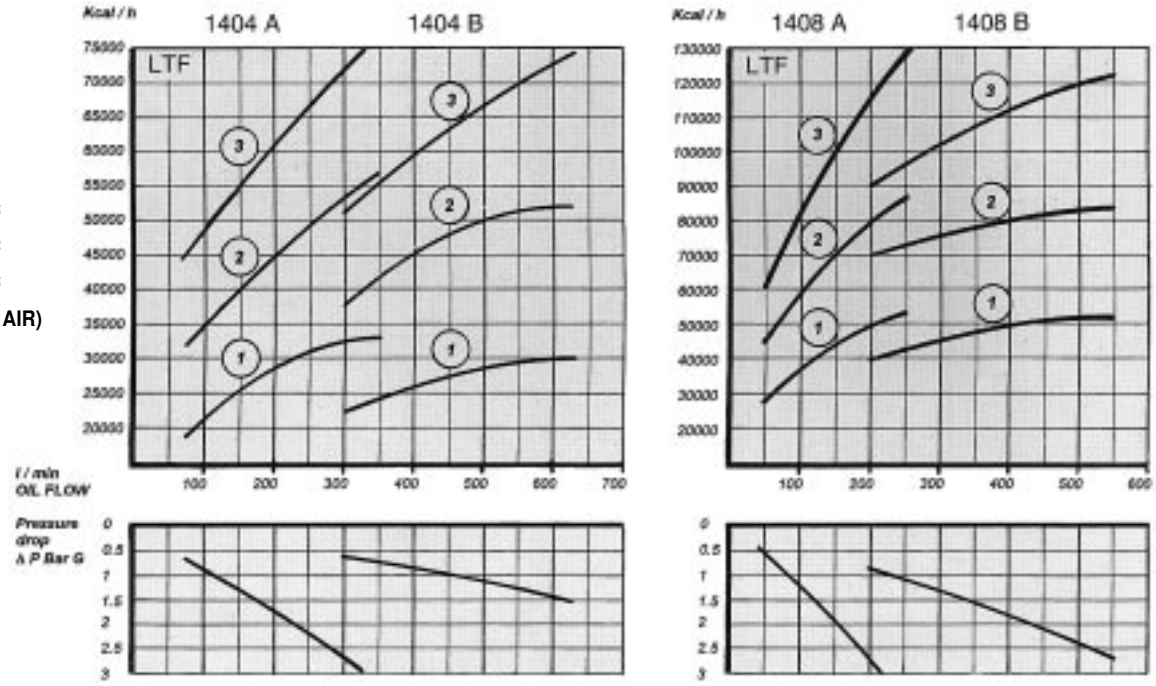

Dimensioni e caratteristiche non impegnative. Tolleranze secondo norme. - *Dimensions and characteristics of the catalogue are subject to change without notice. Clearances according to international standards.*

FLOVEX S.p.A. - 20056 Grezzago (MI) - Via Abruzzi 4/6 - TEL. 02-920192.1 - FAX 02-92019239

LT M

SCAMBIATORI AD ARIA ALTA POTENZIALITÀ

Aircoolers
High duty

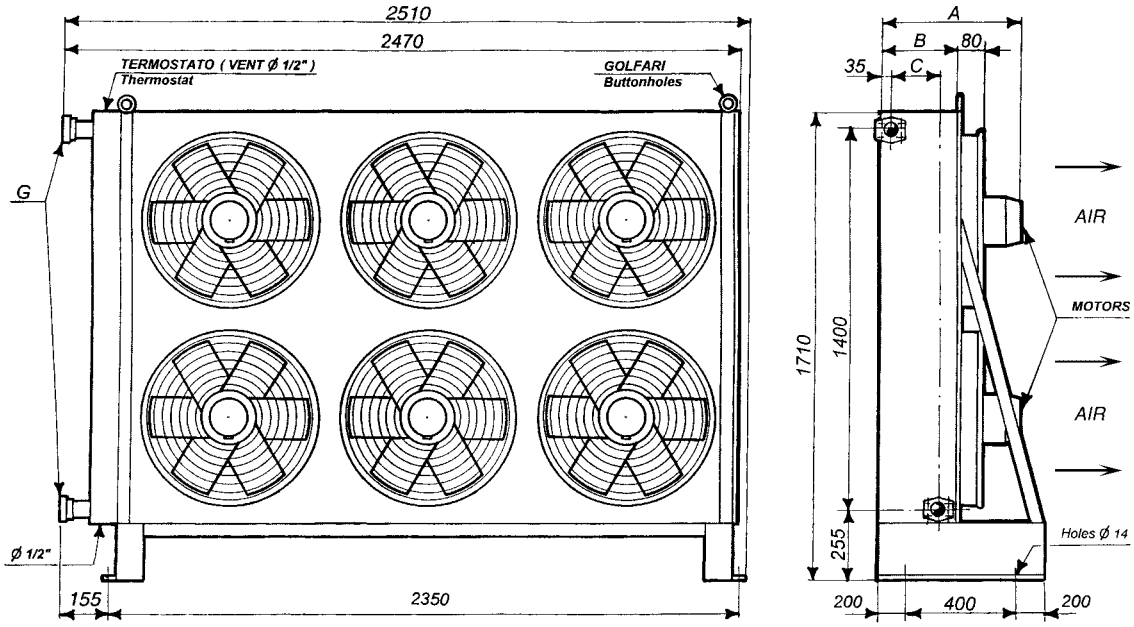

VERNICIATO - *Painting* = **RAL 7381**

VECCHIA SIGLA *Old size*	**TAGLIA** size	**A**	**B**	**C**	Ø **G**	MOTORE ELETTRICO *electric motor*
14/21.4	**2104**	400	190	65	2" SAE 3000 #	6 x 250W - 400V~ 3 Phase
14/21.8	**2108**	490	280	185	2" SAE 3000 #	6 x 730W - 400V~ 3 Phase

TEMP. PROGETTO	*design temperat.*	**°C**	99
PRESS. PROGETTO	*design pressure*	**Bar G**	10
PRESSIONE PROVA	*test pressure*	**Bar G**	13
DATI DI PROGETTO	*design data*	**U.M.**	TUBES

FLANGE OPZIONALI: ANSI - UNI - GAS/F - GAS/M - NPT/F

***FLANGE OPTIONAL**: ANSI - UNI - GAS/F - GAS/M - NTP/F*

TERMOSTATI DISPONIBILI: (CONTATTI N.A.)
TA: standard, protezione IP 44 taratura fissa 48°C +/– 12°C
TB: opzionale, protezione IP 65 taratura fissa 48°C +/– 8°C

***THERMOSTAT OPTIONAL**: (CONTACT N.O.)*
TA: standard type, protection IP 44 fixed range 48°C +/– 12°C
TB: opzional type, protection IP 65 fixed range 48°C +/– 8°C

DIAGRAMMI DI RENDIMENTO
Diagrammi validi per olio idraulico 4°E a 40°C alla temperatura di 50°C.

HEAT TRANSFER CURVES
The curves are valides for hydraulic oil 4°E at 40°C at medium temperature of 50°C.

① = Δt 15°C
② = Δt 25°C
③ = Δt 35°C
(Δt = T OIL - t AIR)

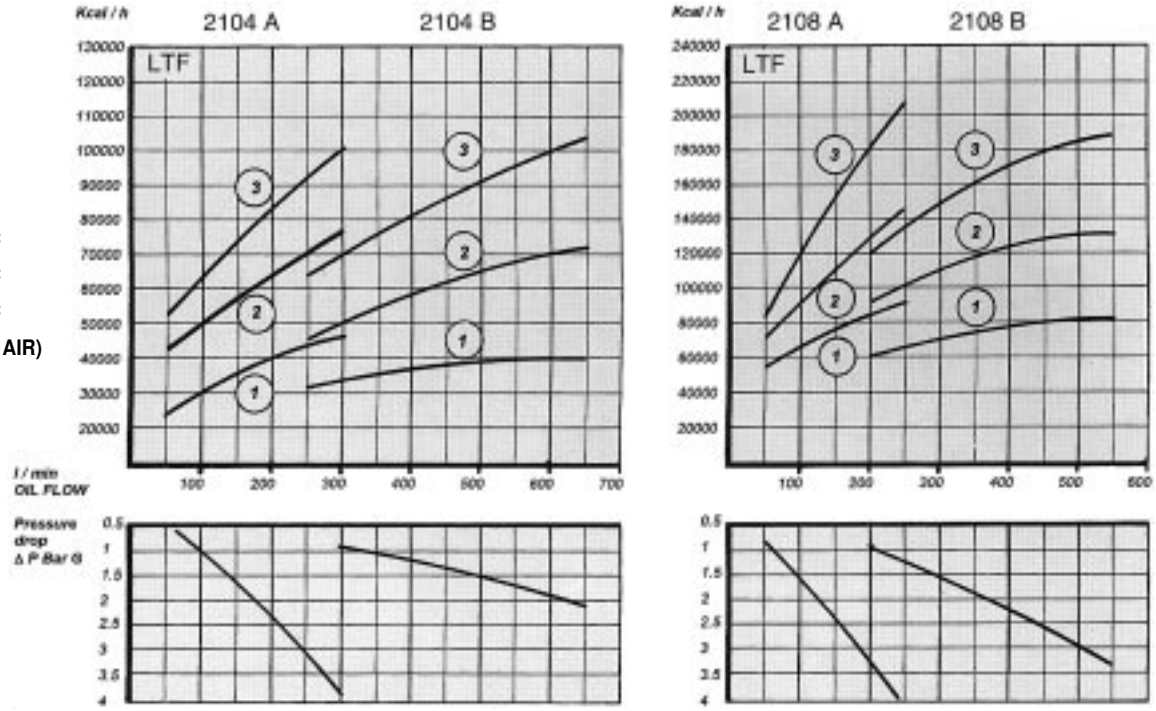

Dimensioni e caratteristiche non impegnative. Tolleranze secondo norme. - *Dimensions and characteristics of the catalogue are subject to change without notice. Clearances according to international standards.*

SHEET 2001.

FLOVEX S.p.A. - 20056 Grezzago (MI) - Via Abruzzi 4/6 - TEL. 02-920192.1 - FAX 02-92019239

EM 1 E *AND* ST 1

PRESTAZIONI DEGLI SCAMBIATORI

tipo STANDARD tubi alettati

PERFORMANCE HEAT EXCHANGER

STANDARD type finned tubes

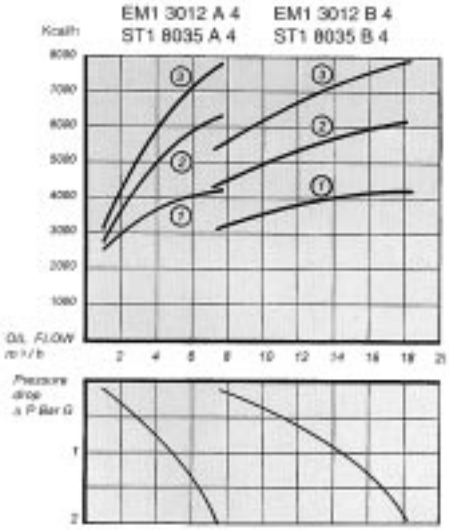

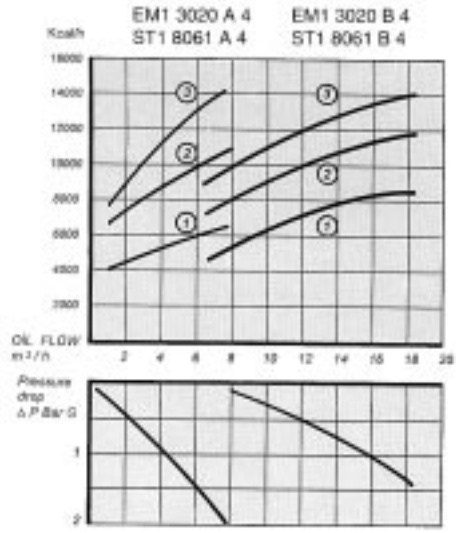

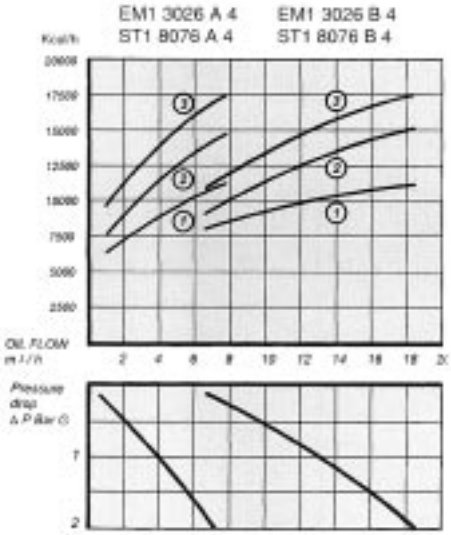

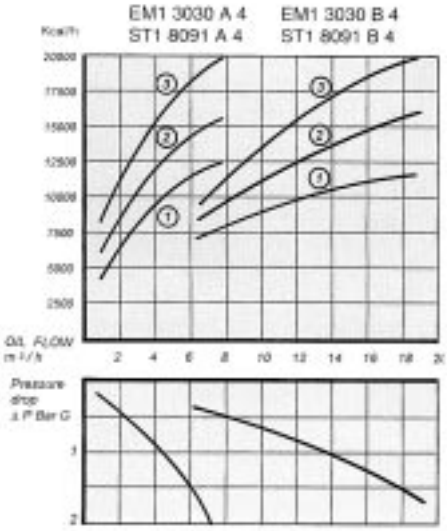

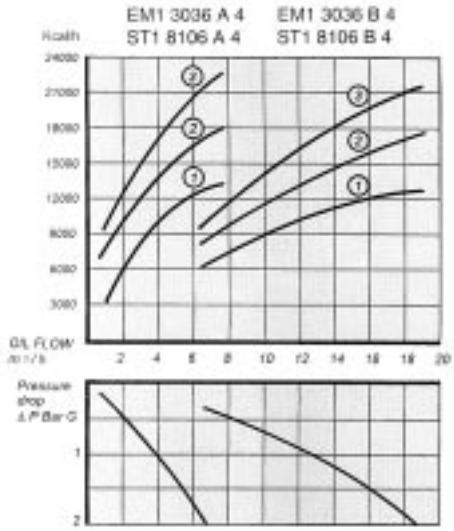

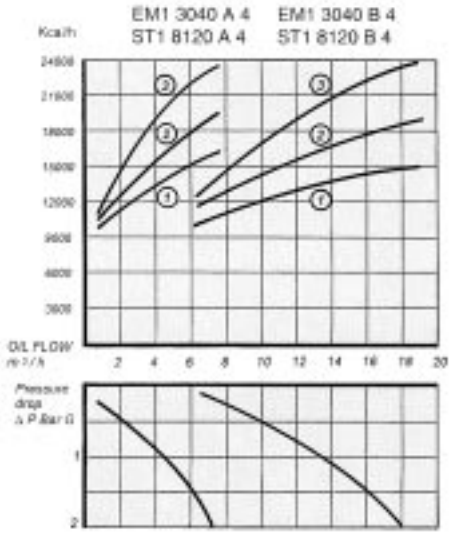

DIAGRAMMI DI RENDIMENTO
Diagrammi validi per olio idraulico ISO VG 46
Differenza di temperatura olio/acqua 25°C

CONSUMO D'ACQUA
① = 0.5 m³/h ② = 1.25 m³/h
③ = 2 m³/h

FATTORE DI CORREZIONE
Per differenze di temperatura olio/acqua diverse da 25°C prima di leggere le curve occorre moltiplicare le kcal/h che si vogliono dissipare per il coefficiente in tabella.

TABELLA *table*	
Δt *oil/water*	*Coefficient*
15	1.4
20	1.2
25	1
30	0.8
35	0.6

HEAT TRANSFER CURVES
The curves are valides for hydraulic oil ISO VG 46
Temperature difference oil/water 25°C

WATER CONSUMPTION
① = 0.5 m³/h ② = 1.25 m³/h
③ = 2 m³/h

TEMPERATURE CORRECTION
For difference of temperature inbetween oil/water other then 25°C before see the curves multiply kcal/h with coefficient of correction table.

Dimensioni e caratteristiche non impegnative. Tolleranze secondo norme. - *Dimensions and characteristics of the catalogue are subject to change without notice. Clearances according to international standards.*

FLOVEX S.p.A. - 20056 Grezzago (MI) - Via Abruzzi 4/6 - TEL. 02-920192.1 - FAX 02-92019239

EM 1

PRESTAZIONI DEGLI SCAMBIATORI

tipo STANDARD tubi alettati

DIAGRAMMI DI RENDIMENTO
Diagrammi validi per olio idraulico ISO VG 46
Differenza di temperatura olio/acqua 25°C

CONSUMO D'ACQUA
① = 2 m³/h ② = 3 m³/h ③ = 4 m³/h

FATTORE DI CORREZIONE
Per differenze di temperatura olio/acqua diverse da 25°C prima di leggere le curve occorre moltiplicare le kcal/h che si vogliono dissipare per il coefficiente in tabella.

PERFORMANCE HEAT EXCHANGER

STANDARD type finned tubes

HEAT TRANSFER CURVES
The curves are valides for hydraulic oil ISO VG 46
Temperature difference oil/water 25°C

WATER CONSUMPTION
① = 2 m³/h ② = 3 m³/h ③ = 4 m³/h

TEMPERATURE CORRECTION
For difference of temperature inbetween oil/water other then 25°C before see the curves multiply kcal/h with coefficient of correction table.

TABELLA *table*

Δt *oil/water*	*Coefficient*
15	1.4
20	1.2
25	1
30	0.8
35	0.6

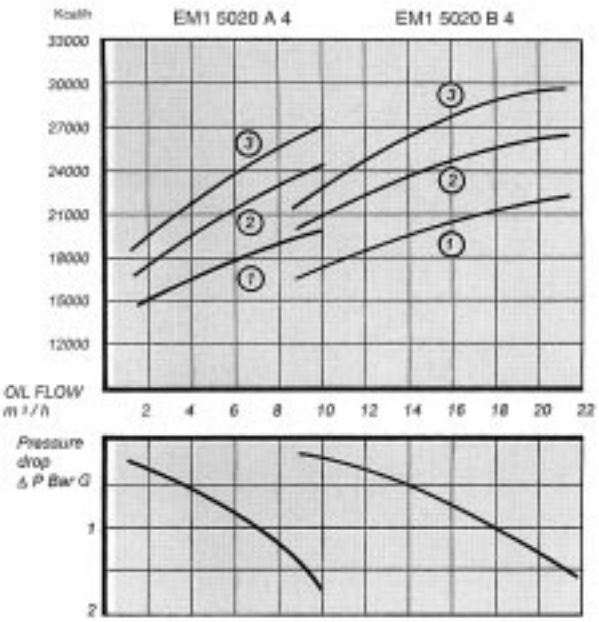

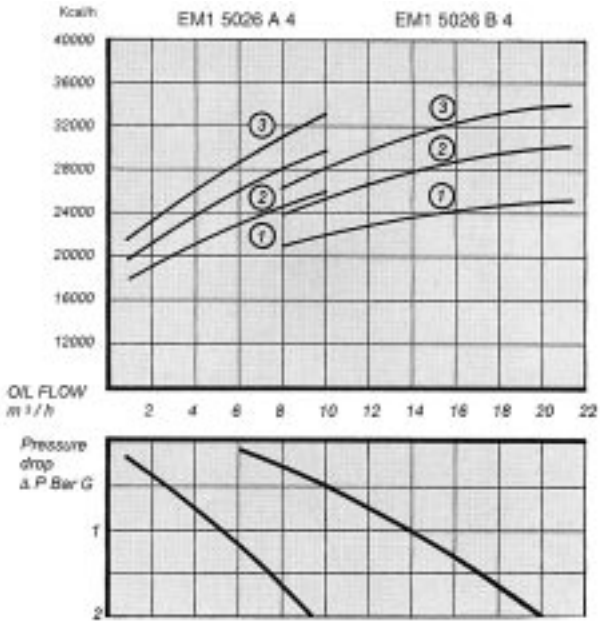

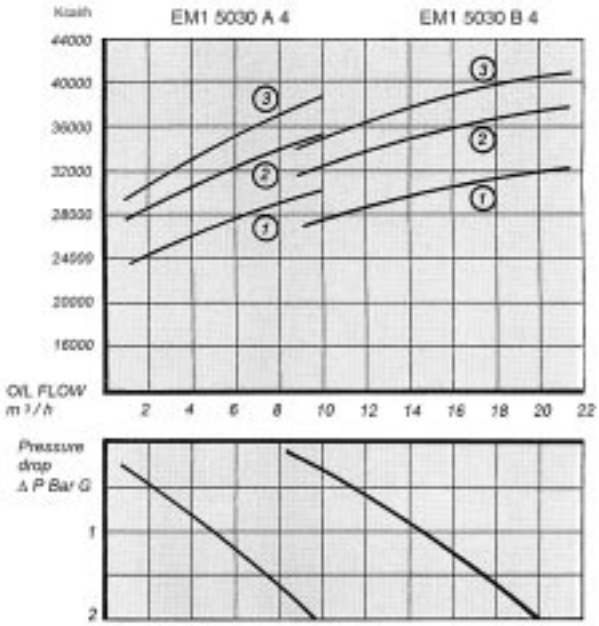

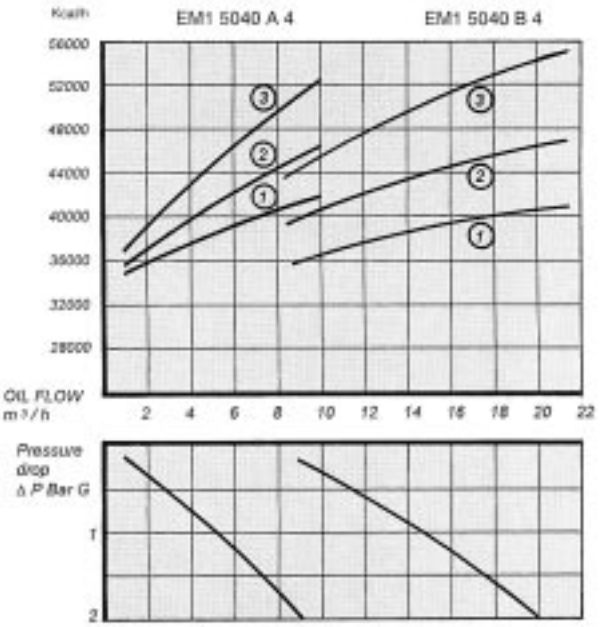

Dimensioni e caratteristiche non impegnative. Tolleranze secondo norme. - *Dimensions and characteristics of the catalogue are subject to change without notice. Clearances according to international standards.*

FLOVEX S.p.A. - 20056 Grezzago (MI) - Via Abruzzi 4/6 - TEL. 02-920192.1 - FAX 02-92019239

EM 1

PRESTAZIONI DEGLI SCAMBIATORI

tipo STANDARD tubi alettati

DIAGRAMMI DI RENDIMENTO
Diagrammi validi per olio idraulico ISO VG 46
Differenza di temperatura olio/acqua 25°C

CONSUMO D'ACQUA
① = 2.5 m³/h ② = 4 m³/h ③ = 5.5 m³/h

FATTORE DI CORREZIONE
Per differenze di temperatura olio/acqua diverse da 25°C prima di leggere le curve occorre moltiplicare le kcal/h che si vogliono dissipare per il coefficiente in tabella.

PERFORMANCE HEAT EXCHANGER

STANDARD type finned tubes

HEAT TRANSFER CURVES
The curves are valides for hydraulic oil ISO VG 46
Temperature difference oil/water 25°C

WATER CONSUMPTION
① = 2.5 m³/h ② = 4 m³/h ③ = 5.5 m³/h

TEMPERATURE CORRECTION
For difference of temperature inbetween oil/water other then 25°C before see the curves multiply kcal/h with coefficient of correction table.

TABELLA *table*

Δt *oil/water*	*Coefficient*
15	1.4
20	1.2
25	1
30	0.8
35	0.6

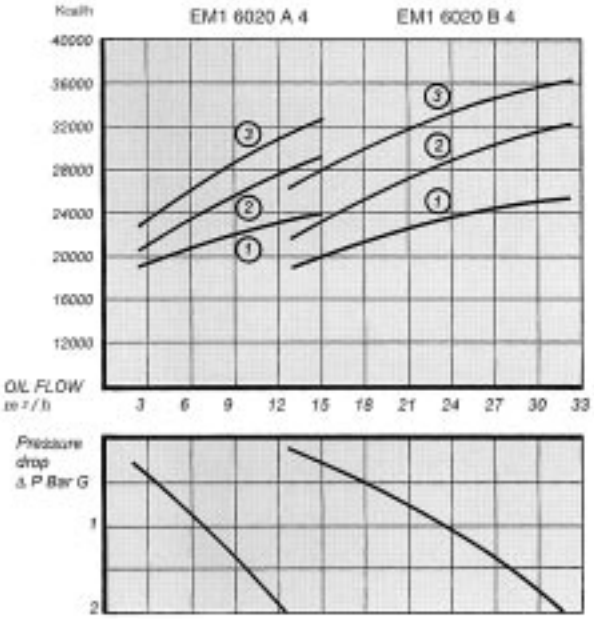

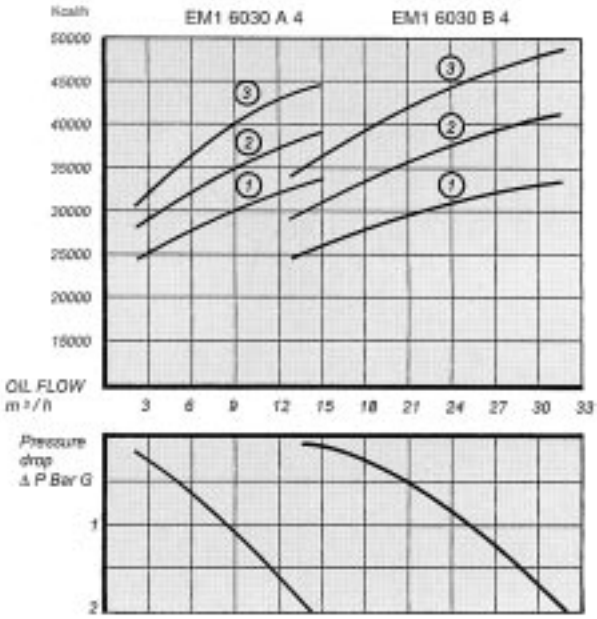

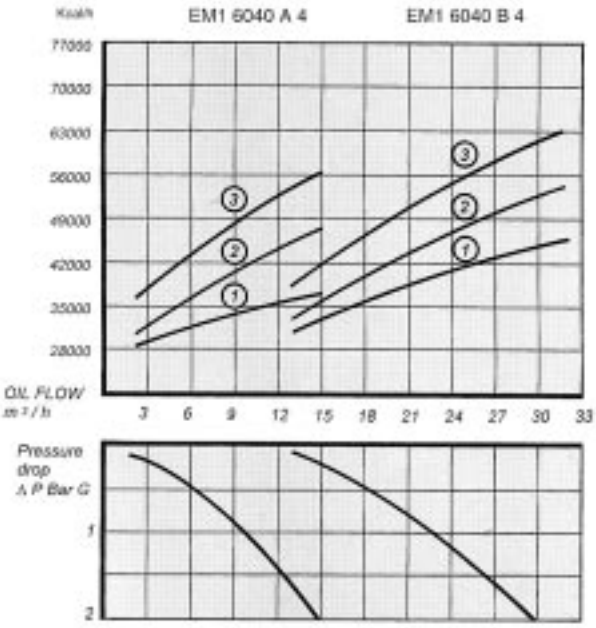

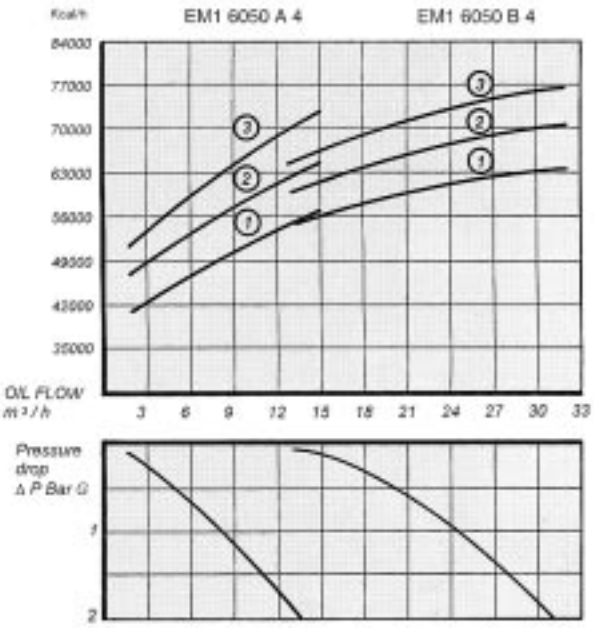

Dimensioni e caratteristiche non impegnative. Tolleranze secondo norme. - *Dimensions and characteristics of the catalogue are subject to change without notice. Clearances according to international standards.*

FLOVEX S.p.A. - 20056 Grezzago (MI) - Via Abruzzi 4/6 - TEL. 02-920192.1 - FAX 02-92019239

EM 1

PRESTAZIONI DEGLI SCAMBIATORI

tipo STANDARD tubi alettati

DIAGRAMMI DI RENDIMENTO

Diagrammi validi per olio idraulico ISO VG 46
Differenza di temperatura olio/acqua 25°C

CONSUMO D'ACQUA

① = 5 m³/h ② = 6 m³/h ③ = 7 m³/h
④ = 8 m³/h ⑤ = 9 m³/h ⑥ = 10 m³/h
⑦ = 11 m³/h ⑧ = 12 m³/h

FATTORE DI CORREZIONE

Per differenze di temperatura olio/acqua diverse da 25°C prima di leggere le curve occorre moltiplicare le kcal/h che si vogliono dissipare per il coefficiente in tabella.

PERFORMANCE HEAT EXCHANGER

STANDARD type finned tubes

HEAT TRANSFER CURVES

The curves are valides for hydraulic oil ISO VG 46
Temperature difference oil/water 25°C

WATER CONSUMPTION

① = 5 m³/h ② = 6 m³/h ③ = 7 m³/h
④ = 8 m³/h ⑤ = 9 m³/h ⑥ = 10 m³/h
⑦ = 11 m³/h ⑧ = 12 m³/h

TEMPERATURE CORRECTION

For difference of temperature inbetween oil/water other then 25°C before see the curves multiply kcal/h with coefficient of correction table.

TABELLA *table*

Δt *oil/water*	*Coefficient*
15	1.4
20	1.2
25	1
30	0.8
35	0.6

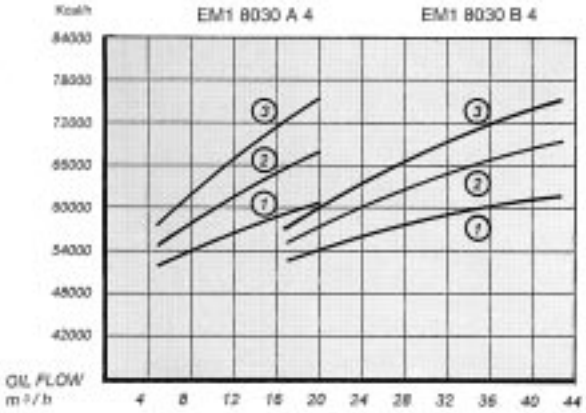

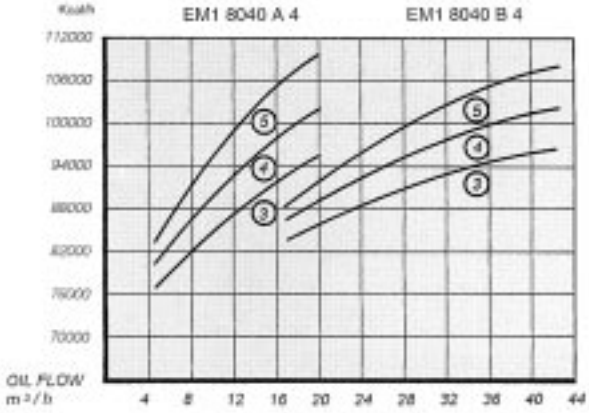

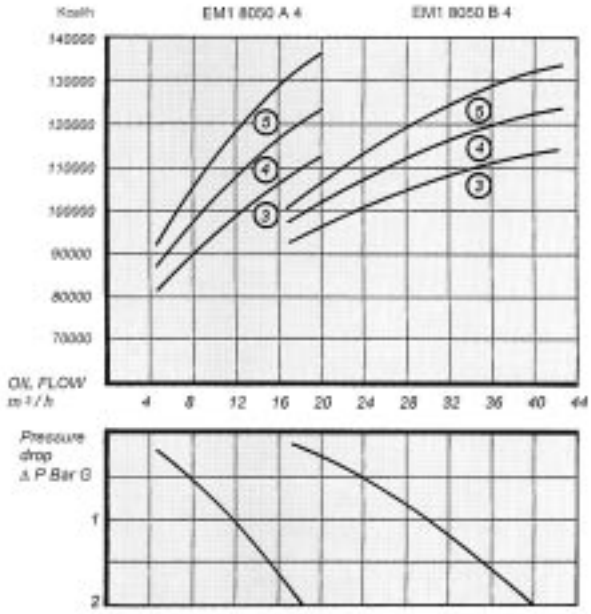

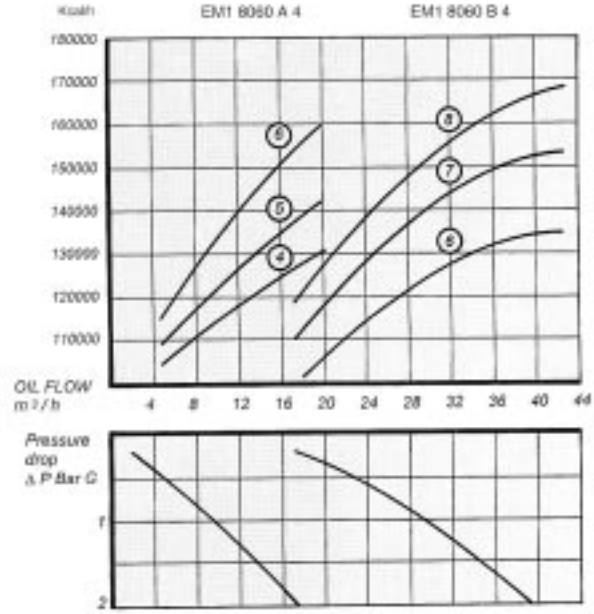

Dimensioni e caratteristiche non impegnative. Tolleranze secondo norme. - *Dimensions and characteristics of the catalogue are subject to change without notice. Clearances according to international standards.*

FLOVEX S.p.A. - 20056 Grezzago (MI) - Via Abruzzi 4/6 - TEL. 02-920192.1 - FAX 02-92019239

GENERAL INFORMATION OPERATING AND MAINTENANCE OF HEAT EXCHANGERS

SUCCESSFUL PERFORMANCE *of heat transfer equipment, length of service and freedom from operating difficulties are largely dependent upon:*

1. *Proper thermal design.*
2. *Proper physical design.*
3. *Manner of installation, including design of foundation and piping.*
4. *The method of operation.*
5. *The thoroughness and trequency of cleaning.*
6. *The materials, workmanship, and tools used in maintenance and making repairs and replacements.*

FAILURE TO PERFORM *properly may be due to one or more of the following:*

1. *Exchanger being dirty.*
2. *Operating conditions being different than design conditions.*
3. *Air or gas binding.*
4. *Incorrect piping connections.*
5. *Excessive clearance between baffles and shell due to corrosion.*
6. *Improper application.*

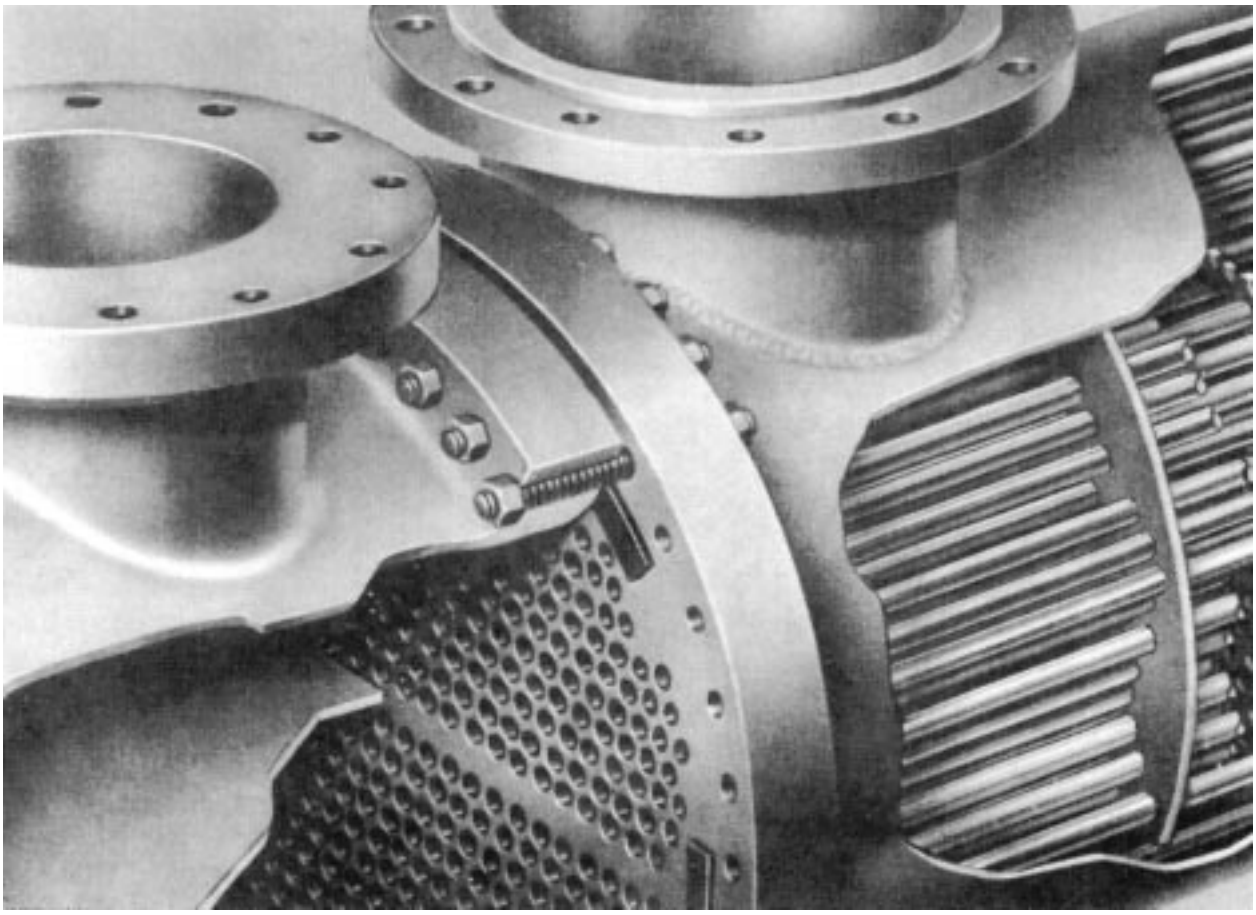

SHEET 2001.138

INSTALLATION PLANNING

1. On removable bundle heat exchangers provide sufficient clearance at the stationary end to permit the removal of the tube bundle from the shell. On the floating head end, provide space to permit removal of the shell cover and floating head cover.

2. On fixed bundle heat exchanger, provide sufficient clearance at one end to permit removal and replacement of tubes and at the other end sufficient clearance to permit tube rolling.

3. Provide valves and bypasses in the piping system so that both the shell side and tube side may be bypassed to permit isolation of the heat exchanger for inspection, cleaning and repairs.

4. Provide convenient means for frequent cleaning as suggested under maintenance.

5. Provide thermometer wells and pressure gauge Pipe taps in all piping to and from the heat exchanger located as close to the heat exchanger as possible.

6. Provide necessary air vent valves for the heat exchanger so that it can be purged to prevent or relieve vapor or gas binding on either the tube side or shell side.

7. Provide adequate supports for mounting the heat exchanger so that it will not settle and cause piping strains. Foundation bolts should be set accurately. In concrete footings, pipe sleeves at least one pipe size larger than the bolt diameter slipped over the balt and cast in place are best for this purpose as they allow the bolt centers to be adjusted after the foundation has set.

8. Proper liquid level controls and relief valves and liquid level and temperature alarms, etc., should be installed.

9. Gauge glasses or liquid level alarms should be installed in all vapar or gas spaces to indicate any failure occurring in the condensate drain system and prevent flooding of the heat exchanger.

10. A surge drum should be installed upstream from the heat exchanger to guard against pulsation of fluids caused by pumps, compressors or other equipment.

11. Drain connections should not be piped to a common closed manifold so that it may be determined that the exchanger has been thoroughly drained.

INSTALLATION AT JOBSITE

CAUTION: Dress properly for the job. You may need any number of special items-safety hat, safety shoes, goggles, heavy gloves, ear protective devices, etc., for your own protection. Find out what items are required and wear therm.

1. On receipt of the heat exchanger at the jobsite, inspect for shipping damage to all protective covers. If damage is evident, inspect for possible contamination and replace protective covers as required. If damage is extensive, notify the carrier immediately.

2. Store under cover in a heated area, if possible.

3. If the heat exchanger must be stored for a period exceeding 30 days, precautions should be taken to prevent rusting or contamination. Following extended storage, it is suggested that the exchanger be thoroughly inspected prior to installation.

4. When installing, set heat exchanger level and square so that pipe connections can be made without forcing.

5. Before piping up, inspect all openings in the heat exchanger for foreign material. Remove all wooden Plugs, bags of desiccant and shipping covers immediately prior to installing. Do not expose internal passages at the heat exchanger to the atmosphere since moisture or harmful contaminants may enter the unit and cause severe damage to the system due to freezing and/or corrosion.

6. After piping is complete, if support cradles or feet are fixed to the heat exchanger, loosen foundation bolts at one end of the exchanger to allow free movement. Oversize holes in support cradles or feet are provided for this purpose.

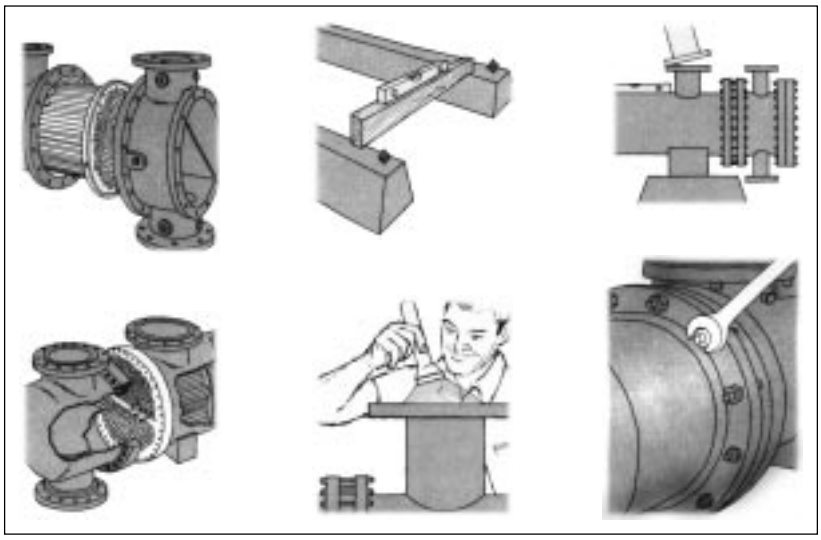

7. If heat exchanger shell is equipped with a bellows type expansion joint, remove shipping supports per instructions.

OPERATION

1. Be sure entire system is clean before starting operation to prevent plugging of tubes or shell side passages with refuse. The use of strainers or settling tanks in pipe lines leading to the heat exchanger is recommended.

2. Open vent connections before starting up.

CAUTION: A heat exchanger is a pressure vessel designed for operation at certain specific limits of pressure and temperature. The cooling or process system, which includes the heat exchanger, must be safeguarded with safety valves and controls so that these heat exchanger design conditions are not exceeded. All operating personnel should be made aware of these specific design pressures and temperatures.

3. Start operating gradually. See Table 1 for suggested startup and shutdown procedures for most applications. If in doubt, consult FLOVEX Technical office for specific instructions.

4. After the system is completely filled with the operating fluids and all air has been vented, close all manual vent connections.

5. Bolting on all gasketed or packed joints should be retightened after the heat exchanger has reached operating temperatures to prevent leaks and gasket failures.

CAUTION: Many heat exchanger circulate fluids which are irritating or dangerous to the human system. These fluids could cause problems if bolted or threaded ionts are not maintaned in a leak-tight condition at operating pressures, temperatures and no-flow, ambient conditions. If fluids are not irritating or dangerous, a leak will at least cause a slippery situation on the floor below. Since one fluid the heat exchanger is at hingher temperatures, any leaks might cause burns.

6. Do not operate the heat exchanger under pressure and temperature canditions in excess at those specified on the name plate.

7. To guard against water hammer, condensate should be drained from steam heated exchangers and similar apparatus both when starting up and shutting down.

8. Drain all fluids when shutting down to eliminate possible freezing and corroding.

9. In all installations there should be no pulsation of fluids since this causes vibration and will result in reduced operating life.

Dimensioni e caratteristiche non impegnative. Tolleranze secondo norme. - Dimensions and characteristics of the catalogue are subject to change without notice. Clearances according to international standards.

FLOVEX S.p.A. - 20056 Grezzago (MI) - Via Abruzzi 4/6 - TEL. 02-920192.1 - FAX 02-92019239

MAINTENANCE

CAUTION: Do not remove channel covers, shell covers, floating head covers or bonnets until all pressure in the heat exchanger has been relieved and both shell side and tube side are completely drained.

1. Exchangers subject to fouling (scale, sludge deposits, etc.) should be cleaned periodically depending on specific conditions. A light sludge or scale coating on either side at the tube greatly reduces its effectiveness. A marked increase in pressure drop and/or reduction in performance usually indicates cleaning is necessary. Since the difficulty of cleaning increases rapidly as the scale thickens or deposits increase, the intervals between cleanings should not be excessive.

2. Neglecting to keep tubes clean may result in random tube plugging. Consequent overheating or cooling at the plugged tubes, as compared to surrounding tubes, will cause physical damage and leaking tubes due to differential thermal expansion of the metals.

3. To clean or inspect the inside at the tubes, remove only the necessary tube side channel covers or bonnets depending on type of exchanger construction.

CAUTION: Since many of the removable components of the heat exchanger, particularly in the larger sizes, are too heavy for men to handle, care must be used to take this weight with proper rigging to avoid injury. Wear hard hats and safety shoes as required.

4. If the heat exchanger is equipped with zinc wasting pencils or plates, replace these as required.

5. To clean or inspect the outside of the tubes, it may be necessary to remove the tube bundle. (Fixed tubesheet exchanger bundles are non-removable.)

6. Some suggested methods at cleaning either the shell side or tube side are listed below:

…Circulating hot wash oil or light distillate through tube side or shell side will usually effectively remove sludge or similar soft deposits.

…Soft salt deposits may be washed out by circulating hot fresh water.

…Some commercial cleaning compounds such as "Oakite" or "Dowell" may be effective in removing the more stubborn depasits. Use in accardance with the manufacturer's instructions.

CAUTION:When the heat exchanger is cleaned, it is important that full characteristics of the fouling material and care exercised in handling them according to instructions. Use eye protection to prevent damage to your eyes. Wear a respirator when required.

7. If the heat exchanger has been in service for a considerable length at time without being removed, it may be necessary to use a jack on the floating tubesheet to break the bundle free.

…A good-sized steel bearing plate should be used with a filler board between the tubesheet face and bearing plate to protect the tube ends.

8. Tube bundles may be lifted horizontally by means of a cradle formed by bending a light-gauge plate or plates into a U shape. Attachments are made in the legs at the U for lifting.

9. Bundles should not be dragged since baffles or support plates may become easily bent. Any damage to baffles must be avoided so that the heat exchanger will function properly.

10. Following are safe loads for rods and eyebolts:

RODS			EYEBOLTS	
size tubes	size rods	safe load per rod	size	safe load
5/8"	3/8"	1,000 lbs	3/4"	4,000 lbs
3/4"	1/2"	2,000 lbs	1"	6,000 lbs
1" or			1¼"	10,000 lbs
larger	5/8"	3,000 lbs	1½"	15,000 lbs

11. When removing tube bundles from heat exchangers for inspection or cleaning, care should be exercised to see that they are not damaged by improper handling.

…The weight of the tube bundle should not be supported on individual tubes but should be carried by the tubesheets, support or baffle plates or on blocks con toured to the periphery of the tube bundles.

…Do not handle tube bundles with hooks or other tools which might damage tubes. Tube bundles should be moved about on cradles or skids.

…To withdraw tube bundles, il is recommended that rods be passed through two or more of the tubes and the load taken on the floating tubesheet.

…Rods should be threaded at both ends and provided with nuts and should pass through a steel bearing plate at each end of the bundle.

…A soft wood filler board should be inserted between the bearing plate and tubesheet face to prevent damage to the tube ends.

…Forged steel eyebolts should be screwed into both bearing plates for pulling and lifting.

…As an alternate to the rods, a steel cable can be threaded through one tube and returned through another tube.

…A hardwood spreader block must be inserted between the cable and the floating tubesheet to prevent damage to the tube ends.

12. Do not attempt to clean tubes by blowing steam through individual tubes. This overheats the individual tube and results in severe expansion strains and leaking tube to tubesheet joints.

CAUTION: Do not blow out heat exchangers with air when the normal process fluids or the cleaning fluids being handled are inflamamable.

13. To locale ruptured or corroded tubes or leaking joints between tubes and tube sheets, the following procedure is recommended;

…Remove tube side channel covers or bonnets.

…Pressurize the shell side of the exchanger with a cold liquid, preferably water.

…Observe tube joints and tube ends for indication of test fluid leakage.

14. With certain styles of exchangers, it will be necessary to buy or make a test ring to seal off the space between the floating tubesheet and shell inside diameter to apply the test in paragraph 13. Cansult your nearest sales representative for reference drawings showing installation of a test ring in your heat exchanger.

15. To tighten a leaking tube joint, use a suitable parallel roller tube expander.

…Do not rol tube beyond the back face of the tubesheet. Maximum rolling depth should be tubesheet thickness minus 1/8".

…Do net reroll tubes which are not leaking since this needlessly thins the tube wall.

16. It is recommended that when a heat exchanger is dismantled, new gaskets be used in reassembly.

…Camposition gaskets become brittle and dried out in service and do not provide an effective seal when reused.

…Metal or metal jacketed gaskets in initial compression match the contact surfaces and tend to work harden and cannot be recompressed on reuse.

17. Use of new bolting in conformance with dimensions and ASTM specifications of the original design is recommended where frequent dismantling is encountered.

FLOVEX S.p.A. - 20056 Grezzago (MI) - Via Abruzzi 4/6 - TEL. 02-920192.1 - FAX 02-92019239

GENERAL INFORMATION OPERATING AND MAINTENANCE OF HEAT EXCHANGERS

TABLE 1
RECOMMENDED START-UP AND SHUT-DOWN PROCEDURES
Caution: Every effort should be made to avoid subjecting the unit to thermal shock, overpressure and/or hydraulic hammer, since these conditions may impose stresses that exceed the mechanical strength ot the unit or the system in which it is installed which may result in leaks and/or other damage to the unit and/ar system.

Heat Exchanger Type of Costruction	Fluid Location & relative Temp.				Start-Up Procedure	Shut-Down Procedure
	Shell side		Tube side			
	Type of Fluid	Rel. Temp.	Type of Fluid	Rel. Temp.		
Fixed Tubesheet (Non removable) Bundle	Liquid	Hot	Liquid	Cold	Start both fluids gradually at the same time	Shut down both fluids gradually at the same time
	Condensing Gas (i.e. Steam)		Liquid or Gas		Start hot fluid first, then hot fluid	Shut down cold fluid first, then hot fluid
	Gas		Liquid		Start cold fluid firs, then hot fluid	Shut down coid fiuid gradualiy then hot fluid
	Liquid	Cold		Hot	Start both flows gradually at the same time	Shut down both fluids gradually at the same time
			Gas		Start cold fluid firs, then hot fluid	Shut down hot fluid first, then cold fluid
U-Tube Packed Floating Head Packed Floating Tubesheet Internal Floating Heat (All these types have Removable Bundles)	Liquid	Hot	Liquid	Cold	Start cold fluid firs, then start hot fluid gradually	Shut down hot fluid first, then cold fluid
	Condensing Gas (i.e. Steam)		Liquid or Gas			Shut down cold fluid first, then shut down hot fluid gradually
	Gas		Liquid			Shut down hot fluid first, then cold fluid
	Liquid	Cold		Hot		
			Gas			

General Comments:
1) *In all start-up and shut-down operations, fluid flows should be regulated so as to avoid thermal shocking the unit regardless of whether the unit is of either a removable or non-removable type construction.*
2) *For fixed tubesheet (non-removable bundle) type units where the tube side fluid cannot be shut down, it is recommended that (1) A bypass arrangement be incorporated in the system, and (2) The tube side fluid be bypassed before the shell side fiuid is shut down.*

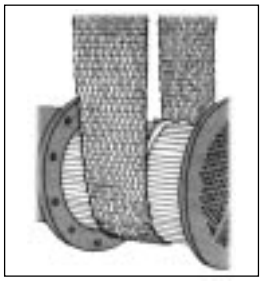
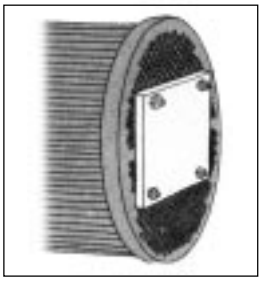

Dimensioni e caratteristiche non impegnative. Tolleranze secondo norme. - *Dimensions and characteristics of the catalogue are subject to change without notice. Clearances according to international standards.*

FLOVEX S.p.A. - 20056 Grezzago (MI) - Via Abruzzi 4/6 - TEL. 02-920192.1 - FAX 02-92019239

Filtri per olio *Lube oil filters*

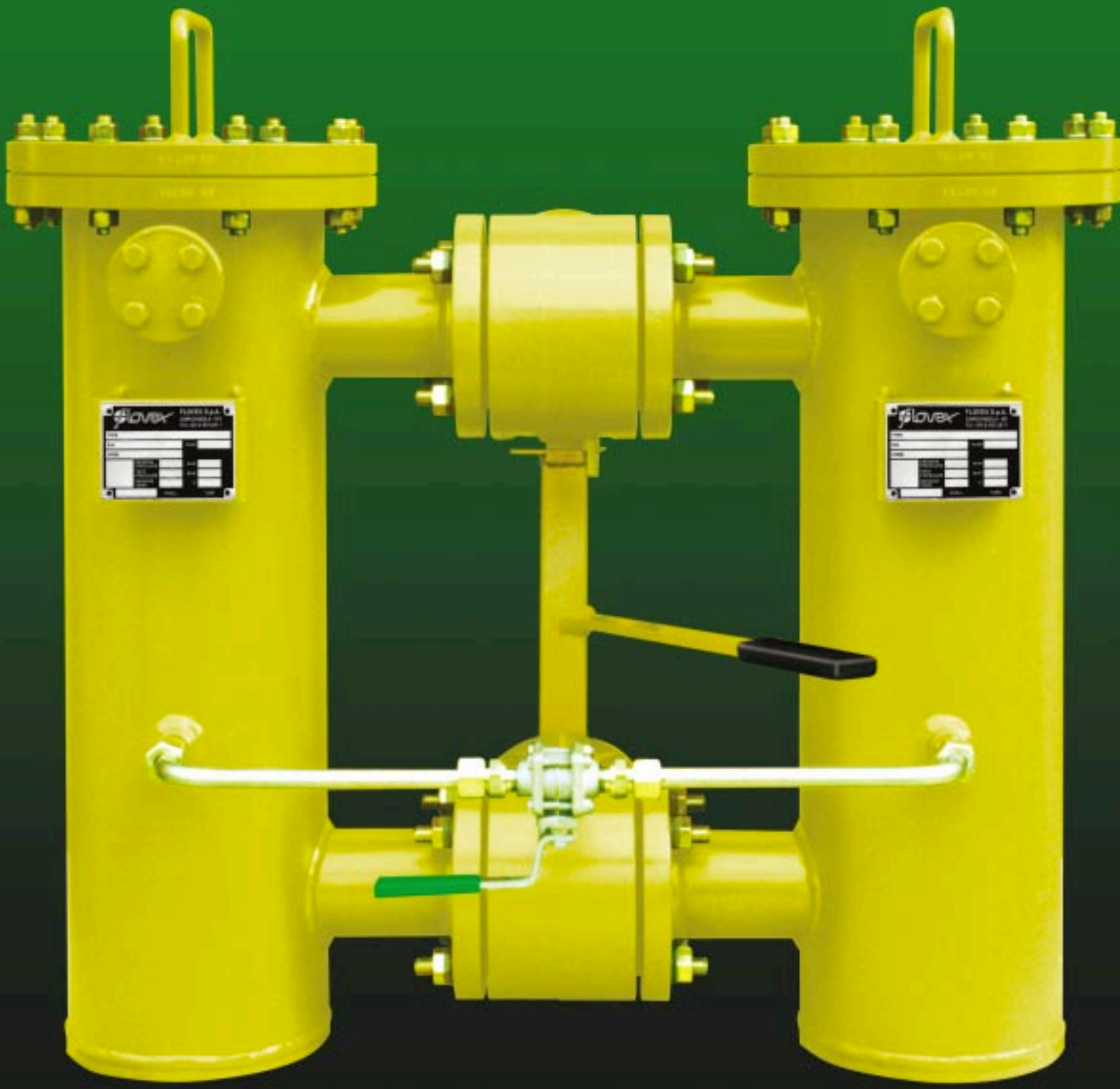

FLOVEX

FLOVEX S.p.A.
Via Abruzzi, 4/6 - 20056 GREZZAGO (MI) ITALY
Tel. +39 02 920192.1 r.a. - Fax +39 02 92019239
E- mail: flo@flovex.it - www.flovex.it

AZIENDA CON SISTEMA QUALITÀ
CERTIFICATO DA DNV
UNI EN ISO 9001

Fin dalla sua fondazione, 1977, la Flovex ha operato con professionalità nel campo degli scambiatori di calore per oleodinamica e lubrificazione.

Nel mondo stanno funzionando più di 100.000 impianti con scambiatori Flovex.

Una forte tendenza a seguire le richieste del mercato e dei clienti ha permesso a Flovex di espandersi durante gli anni sia in Italia che in numerosi Paesi europei distinguendosi per la sua alta qualità (ISO 9001) e la certificazione ASME (U-STAMP).

La medesima qualità è stata posta nella progettazione e costruzione della nuova linea FILTRI per olio DUPLEX e singoli.

Il nostro standard di costruzione è in accordo ad ASME VIII DIV. 1 ed API 614.

Vengono normalmente impiegati acciaio al carbonio ed acciaio inossidabile nei vari gradi richiesti.

Tutti gli apparecchi vengono collaudati secondo il nostro sistema di qualità ISO 9001. Secondo le normative e le esigenze necessarie si eseguono anche collaudi con Enti riconosciuti come LL.RR., B.V., DNV,… e la stampigliatura U-STAMP.

La Flovex utilizza cartucce filtro dei più qualificati costruttori per rispettare i valori di filtrazione richiesti.

Since is foundation, 1977, Flovex has been operating with authority in the field of heat exchangers lubrification systems.

More than 100.000 implants are working in the world with our heat exchangers.

A strong orientation of the market and of the costumer requirements has allowed Flovex to expand over the years both on the national territory and in many European countries with a continuous track record of high quality (ISO 9001) and certification ASME (U-STAMP).

The same quality was used in projecting an constructing the new family of DUPLEX or single FILTERS for oil.

Our standard of construction is according to ASME VIII Div. 1 and API 614 codes.

Carbon steel and stainless steel are the materials usually used.

All the manufactures are tested according to our quality system ISO 9001.
According to the codes and necessities even tests by LL.RR., B.V., DNV,… and U-STAMP are done.

Flovex uses cartdriges of the most qualified factories to respect the values of filtration requested.

FLOVEX

ASME

U

Filtro per olio DFX Lube oil filter

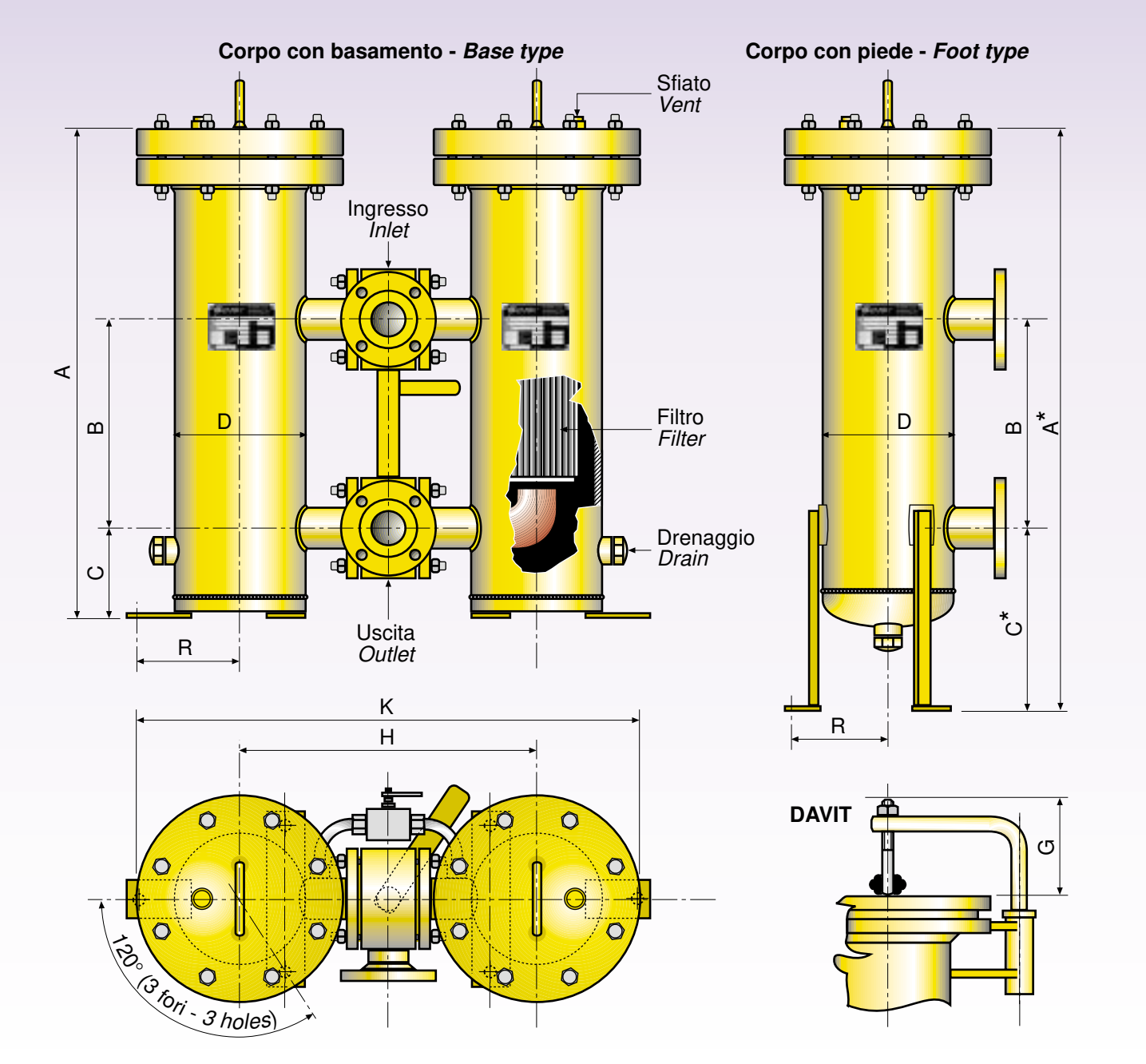

TAGLIA *size*	IN / OUT	Portata max *Max flow* lt/min	A	A*	B	C	C*	D	H	K	R	G
DFX 0410	1 1/2"	230	675	900	330	140	365	141	476	680	100	-
DFX 0820	2	380	770	1020	330	140	390	219	492	800	150	-
DFX 0830	3	840	995	1245	350	140	390	219	522	830	150	-
DFX 1240	4	1480	1105	1455	400	185	535	323	715	1135	230	50
DFX 1260	6	2700	1160	1510	600	185	535	323	827	1250	230	50
DFX 1680	8	4500	1175	1555	600	210	590	406	820	1330	260	50

- Portata max di olio tipo ISO VG32
- Codice di costruzione: ASME VIII Div. 1 - API 614
- Esecuzione flangiata a 3 vie con sfera in acciaio inox
- Sfiati e drenaggio: Ø 1/2" NPT-F
- Tubazione di by-pass Ø 1/2" con valvola
- Sistema DAVIT secondo codice

- *Max flowrate of oil ISO VG32 type*
- *Costruction code: ASME VIII Div. 1 - API 614*
- *3 way flanged esecution with int. boll 316 in stainl.steel*
- *Vent & drain: Ø 1/2" NPT-F*
- *By-pass tubing Ø 1/2" with bool valve*
- *DAVIT system according code*

I dati indicati in questo catalogo non sono impegnativi, e la Flovex allo scopo di migliorare la propria produzione si riserva il diritto di apportare modifiche in qualsiasi momento e senza alcun preavviso.

The information shown in the catalogue are not binding and in order to improve production, Flovex reserves the right to make any changement (including sizing) considered necessary at anytime and without previous notice.

Emiss. 01-2002

Filtri e scambiatori di calore per impieghi industriali

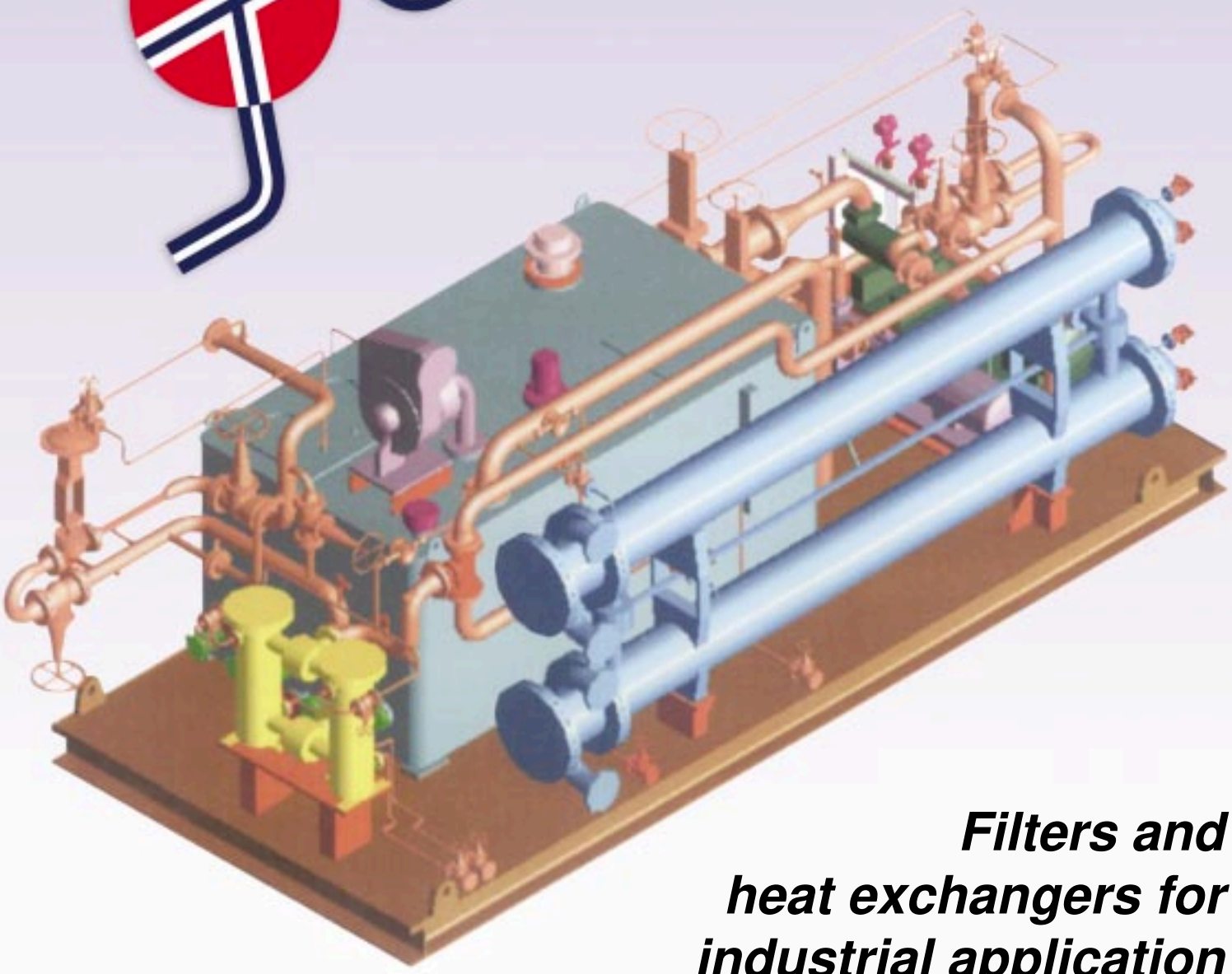

Filters and heat exchangers for industrial application

FLOVEX

FLOVEX S.p.A.
Via Abruzzi, 4/6 - 20056 GREZZAGO (MI) ITALY
Tel. + 39 02 920192.1 r.a. - Fax + 39 02 92019239
E- mail: flo@flovex.it - www.flovex.it